USER MANUAL

Tisas Pistols



TRABZON SİLAH SANAYİ A.Ş

Tisas®

1993

ZIG 14 (9X19 mm)

1. GENERAL WARNINGS....3
2. SAFETY GUIDELINES....3
3. BEFORE USING YOUR PISTOL....8
4. PARTS OF THE TİSAS ZIG 14 MODEL PISTOL....10
5. OVERVIEW OF THE MECHANISMS....11
6. LOADING....13
7. FIRING....14
8. UNLOADING....15
9. DECOCKING THE HAMMER....16
10. TROUBLESHOOTING....17
11. DISASSEMBLY & ASSEMBLY....20
12. CLEANING....22
13. PARTS LIST....24
14. EXPLODED DIAGRAM....25
15. IMPORTER INFORMATION....26

1. GENERAL WARNINGS

- Read this user manual carefully before using the product.
- Do not use any firearm before reading the safety rules and maintenance instructions.
- Obey the laws in your country referring to firearms purchasing, carrying and use.

All firearms are dangerous. Tisas is not responsible for any damage that results from the improper use of your firearm.

2. ESSENTIAL FIREARM SAFETY GUIDELINES

These firearm safety guidelines have been prepared by Tisas, based upon currently available information. They are provided to you as a courtesy and in the interest of furthering safety. These guidelines are not comprehensive, nor do they modify or replace rules, recommendations, standards, or regulations made by legal authorities or manufacturers.

As a responsible firearms producer Tisas believes that no issue is more important than firearm safety. We urge you to learn and practice the following guidelines and to make them your habit when handling firearms. This will help ensure safe handling of your firearm(s) and help prevent accidents. We also encourage you to complete an approved firearms safety-training course.

THE 3 CARDINAL FIREARMS SAFETY RULES

1. Always handle a firearm as if it is loaded

Even if you determine that a firearm is unloaded, always, always, always handle it like it is loaded. When you handle a firearm, the first thing you should do (with the firearm pointed in a safe direction), is open the action to identify whether the firearm is loaded. If you do not know how to open the action, do not handle the firearm. And remember, removing a magazine alone does not make a firearm unloaded, as there may be a round in the chamber.

2. Always keep your finger out of the trigger guard and off the trigger until you are ready to shoot your target

Do not place your finger inside the trigger guard until you have placed a firearm's sights on your target and have decided to fire. The best place to rest your finger in the meantime is above the trigger guard along the frame. By waiting until you are aimed at your target, if the trigger were to be pressed, you will guarantee that a shot will travel safely in the direction of your intended target.

3. Always keep a firearm pointed in a safe direction, before and beyond your target

It is important to identify your actual target, but it is just as important to know what lies past and before your target. A safe direction is any direction where an unintentional discharge or miss will not cause injury or damage. In determining a safe direction, remember that

a round can ricochet off an object like a floor, water or wall, or go through walls, floors, ceilings, and windows. Whether in a house or outdoors, the safest direction is the muzzle angled down toward the floor. And never point at or cross the muzzle of a firearm (loaded or unloaded) at any part of any person's body—the laser rule!

ADDITIONAL FIREARMS AND AMMUNITION RULES

ALWAYS KEEP CHILDREN AND OTHERS SAFE BY STORING FIREARMS SECURE AND AWAY FROM UNAUTHORIZED PERSONS

You should always store firearms and ammunition out of the sight and reach of children and anyone else who is not an intended user or not physically or mentally capable of handling and using them properly and safely. Store firearms in a safe storage place – ideally, one you can lock.

CAREFULLY READ THE ENTIRE INSTRUCTION MANUAL THAT COMES WITH YOUR FIREARM

You should only use a firearm if you fully understand how to safely operate it. All firearms come with an instruction manual created by the manufacturer. If the firearm does not come with an instruction manual, contact the manufacturer directly and request one.

ALWAYS DETERMINE THAT THE FIREARM IS SAFE TO OPERATE

Before shooting, make sure the firearm is in good working order, that the barrel is clear, and that the firearm is safe to operate. This is especially important when handling a firearm that has been stored or unused for a long period of time.

ALWAYS USE CORRECT AMMUNITION

Never use improper or incorrect ammunition. Only use ammunition that is recommended by the firearm manufacturer the caliber of your firearm. Most firearms have the caliber engraved or stamped on the barrel. Your ammunition should have the exact same caliber. If you use the incorrect ammunition, it can destroy a firearm and cause serious injury. Additionally, it voids your warranty.

WHEN CLEANING A FIREARM, MAKE SURE IT IS NOT LOADED

One of the most common statements following an accidental discharge is: “I was cleaning the firearm and it went off!” When you clean a firearm, make sure it is not loaded. You should keep the ammunition in another room until you have finished cleaning the firearm and are ready to reload.

NEVER USE FIREARMS WHILE USING DRUGS OR ALCOHOL

When you handle firearms, your judgment must NOT be impaired. You should NEVER handle firearms while under the influence of alcohol, illegal drugs or while using legal prescription medication that can make you tired or affect your senses, reflexes, or judgment.

USE EYE AND EAR PROTECTION

Always wear proper eye and ear protection while shooting firearms; ear protection will help prevent hearing loss from the extreme decibel level of gunfire, and eye protection will help prevent ejection gases, ricocheted objects, casings, or any foreign objects from damaging your eyes. Be smart, be safe.

3. BEFORE USING YOUR PISTOL

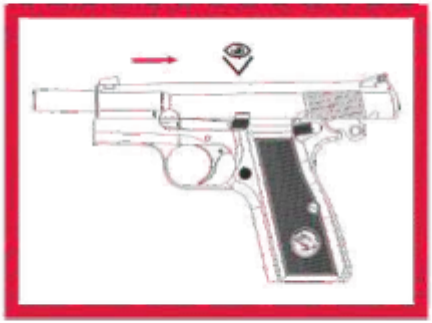

Your Tisas pistol is semi-automatic, meaning that it is automatically reloaded and ready to fire again after each shot.

Your Tisas pistol can fire even without a magazine inserted. For that reason, ejecting the magazine or inserting an empty magazine does not make your pistol safe. Rather, to ensure your pistol is safe, you must eject the magazine, empty the chamber, and then visually inspect the chamber to ensure no cartridge or other obstruction is present.

Possess, carry and use your pistol in accordance with all relevant local, state, and federal laws. If you purchased this firearm secondhand, have it checked by a qualified armorer or gunsmith to ensure it is safe to operate.

ATTENTION: Keep your firearm in a safe place where children cannot access it. Always store your firearm unloaded and store the key to the lock separately from the ammunition.



IMPORTANT: When not it use, your firearm sholud be secured with a lock to prevent unauthorized use. A cable lock, such as shown here must be used to prevent the firearm from locking into battery to prevebt use.

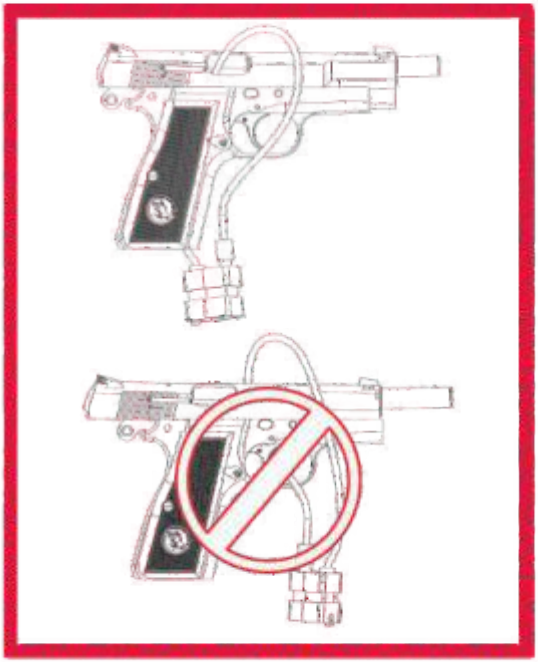

4. PARTS OF THE TISAS ZİG 14 MODEL PISTOL

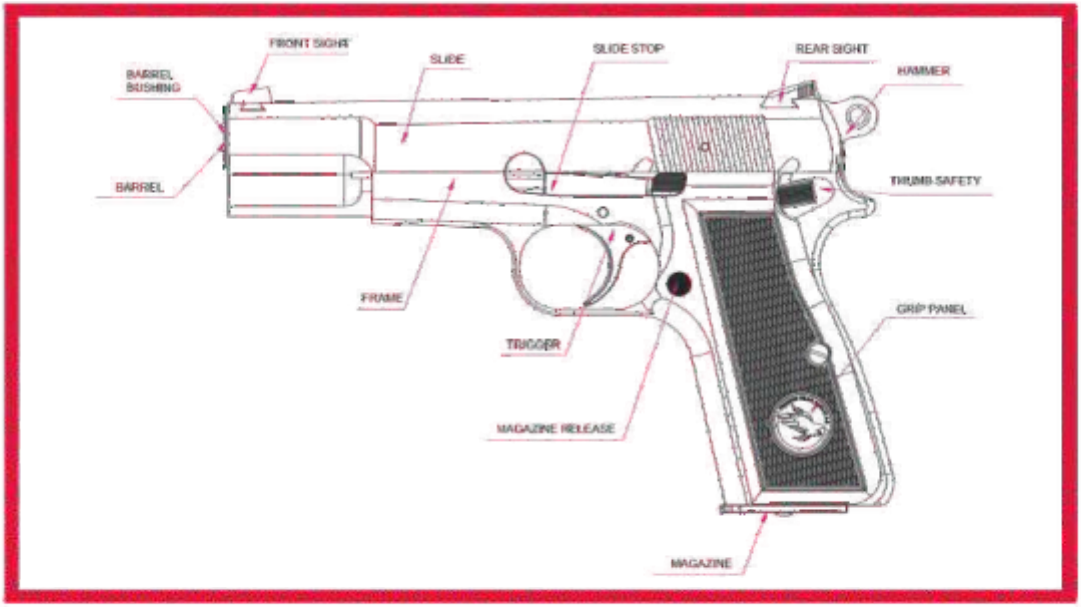

5. OVERVIEW OF SAFETY MECHANISMS

The thumb safety can be engaged and disengaged when the hammer is in half-cocked and cocked position. However, when the hammer is in the forward position, the thumb safety cannot be engaged or disengaged.
The hammer safety is engaged when the hammer is half-cocked and cocked and the thumb selector lever is switched into the up position. When the hammer is not cocked, this safety cannot be engaged, however, it can be engaged if the hammer is half-cocked.

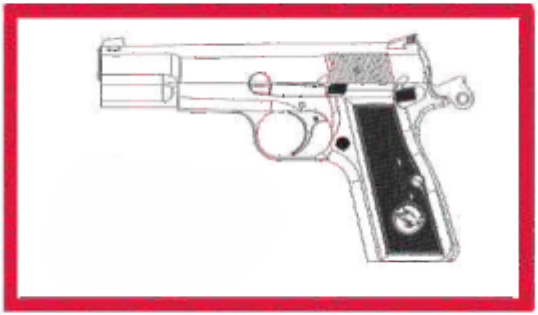

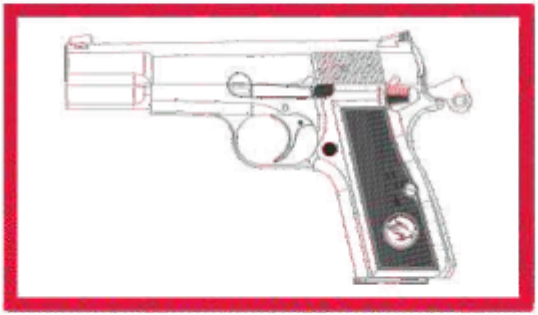



ATTENTION: Your pistol does not have a magazine safety feature!

This firearm can fire without a magazine! Always visually inspect the firing chamber to ensure that it is empty. The chamber is empty when no cartridge is visible when looking from the ejection port into the open chamber.

If the hammer is fully-cocked and you want to engage the hammer safety, do the following:
• Point the barrel in a safe direction and eject the magazine by pressing the magazine release lever.
• Perform an inspection to ensure you have done so.
• Insert an empty magazine.
• Grip the pistol firmly.
• While grasping the hammer firmly between two fingers, squeeze the trigger, and slowly guide the hammer to its half-cocked position.
• Lock the hammer by use of the thumb safety selector.
When the hammer safety is engaged, the hammer will not touch the firing pin.



ATTENTION: Do not attempt to engage the hammer safety when the chamber is loaded. The pistol will fire if the hammer slips from between your fingers, possibly resulting in injury or death to yourself or others.

6. LOADING

After making sure that your pistol is clean, and that the ammunition is clean, dry and of the correct caliber and type, hold the magazine with one hand and insert ammunition cartridges into the magazine with the other hand until the magazine is fully loaded.

Insert the magazine into the pistol, then retract the slide and release it. At this point, the chamber is loaded and your pistol is ready to fire.

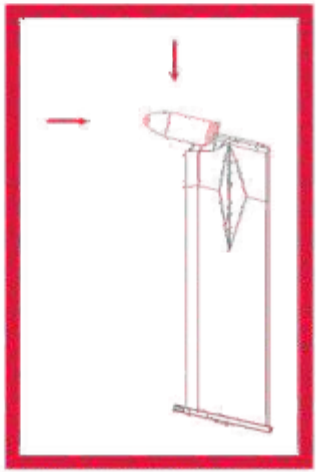



IMPORTANT: Always keep your finger off the trigger while loading your pistol, and always point the barrel in a safe direction.

7. FIRING



- Grip your pistol firmly.
- Point the pistol at your intended target and assume a proper shooting stance.
- Aim the pistol precisely at your intended point of impact within the larger target.
- When you are ready to fire, place your finger on the trigger and lightly squeeze the trigger. The pistol will fire one cartridge, and then ready itself to fire a subsequent cartridge.
- Squeeze the trigger again to fire this subsequent cartridge, and repeat this procedure until you wish to stop firing or until you run out of ammunition, at which point the slide will lock in its retracted position.

IMPORTANT: If you are untrained or inexperienced, and have a misfire, a malfunction, or in the event the pistol stops firing before the magazine is empty, unload the pistol and utilize the assistance of a qualified firearms instructor before attempting to operate your Tisas pistol.

8. UNLOADING

When the last cartridge in the magazine is fired, the slide locks in its retracted position. To unload from this point:

- Point the barrel in a safe direction.
- Eject the magazine by pressing the magazine release lever.
- Visually inspect the chamber to confirm that it is empty.
- Pull the slide to the rear and slowly release the slide to its forward position.

If you wish to unload before the magazine has been emptied, when the slide is in a forward position, or when the hammer is in the fully-cocked position:

- Point the barrel in a safe direction and keep your finger off the trigger.
- Eject the magazine by pressing the magazine release lever.
- Pull the slide to the rear and visually inspect the chamber to confirm that it is empty.
- Release the hammer by following the procedure for that specific action.

ATTENTION: In order to ensure that your pistol is unloaded, eject the magazine and then visually inspect the chamber by pulling the slide rearward.

9. DECOCKING THE HAMMER

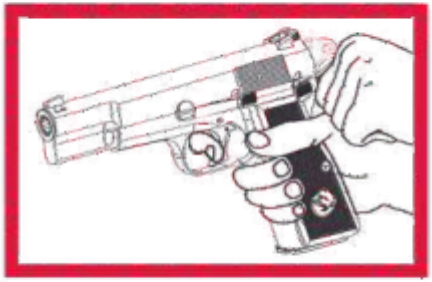

- Point the barrel in a safe direction and remove the magazine.
- Visually inspect the chamber to confirm that it is empty.
- Insert an empty magazine.
- Grip the pistol properly with your dominant hand as if preparing to fire.
- Grasp the hammer between the thumb and index finger of your other hand.
- Squeeze the trigger and slowly push the hammer until the hammer safety is engaged.

Do not release the hammer until the hammer fits into its half-cocked position.



ATTENTION: Always store and carry your pistol with its chamber empty and its hammer safety engaged. When your pistol is loaded, do not try to release the hammer, as doing so may fire your pistol and cause injury or death to yourself or others. Also, release the hammer slowly by grasping it firmly between two fingers. Fast release of the hammer can result in damage to the firing pin.

10. TROUBLESHOOTING



CAUTION: When troubleshooting, always safely unload your firearm while pointing in a safe direction.

Slide will not lock forward into battery:

- Do not attempt to manually force the slide into battery.
- Point your barrel in a safe direction.
- Eject the magazine.
- Retract the slide to facilitate extraction and ejection of the chambered cartridge.
- If the cartridge does not extract and eject, lock the slide in its retracted position.
- Inspect the cartridge and carefully attempt manual extraction/ejection. If the cartridge cannot be extracted/ejected, seek the assistance of a qualified armorer or gunsmith.



ATTENTION: This problem may be the result of a dirty firearm, incorrect ammunition, or an incorrect magazine. Do not attempt manual extraction/ ejection of a severely impounded cartridge, as doing so may result in a serious accident and/or injury.

Squib load, inadequate charge in cartridge:

- This can be recognized by a weak report when fired, possibly a light recoil of the operation and a failed ejection.
- Stop firing immediately.
- Unload your firearm in a safe manner.
- Retract and lock the slide to the rear and inspect both the chamber and the barrel to determine whether or not they are obstructed.
- If an obstruction is present, keep your pistol pointed in a safe direction and obtain assistance from a qualified armorer or gunsmith.

IMPORTANT: If the chamber/barrel becomes obstructed and you continue to fire, the pistol may explode, resulting in serious injury or death to yourself or others.

Troubleshooting other malfunctions:

- Replace any damaged magazines or ammunition cartridges.
- Inspect and clean the chamber.
- Clean the magazine.
- Clean the thumb safety selector and the cartridge ramp.
- If after taking these steps your pistol continues to malfunction, obtain assistance from a qualified armorer or gunsmith.

ATTENTION: Carry out all troubleshooting operations in a safe location with the firearm pointed in a safe direction.

ATTENTION: Cleaning solvent is a flammable material and should be kept away from a flame.

11. DISASSEMBLY and ASSEMBLY

Disassembly



- Point the barrel in a safe direction and remove the magazine.
- Pull the slide to the rear and visually inspect the chamber to confirm that it is empty.
- Slightly push the slide backwards and rotate the thumb safety.
- Press the stub of the pin which projects out of the right side of the receiver.
- Hold the slide and release the thumb safety.
- Push the slide forward and remove it.
- Remove the recoil spring and the barrel.



NOTE: Keep your hand on the recoil spring as it is under pressure. If you lose your grip, the spring may eject and could lead to injury.







Assembly

• Follow the steps for disassembly in reverse order.

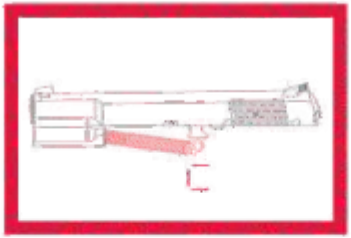

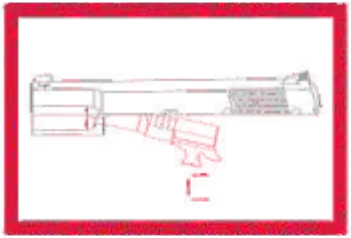



1. Complete Lower Frame
2. Slide Assembly
3. Barrel
4. Recoil spring guide and Recoil main spring
5. Slide stop
6. Magazine

12. CLEANING

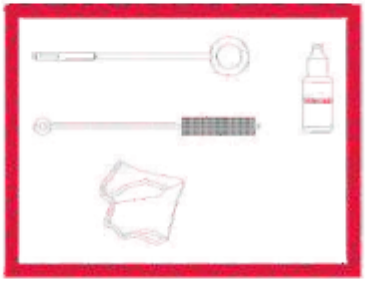

Materials needed for cleaning:

- Solvent
- Gun oil
- Cleaning cloth
- Brush
- Ramrod



WARNING: Wear protective goggles when using solvent.

- Remove the magazine.
- Extract/eject any chambered round and confirm that the chamber is clear.
- Disassemble the firearm.
- Remove the grip panels if you will use solvent to clean the frame or other parts close to the frame (do not clean the grip panels with solvent and do not lubricate them).
- Wipe dirty surfaces, parts, slide channels and inside the barrel with solvent using brush.
- Do not use brush from both ends of the barrel, clean from the chamber end only. It is a best practice to not allow the brush to abrade the crown of the muzzle on any gun.

- Wipe down all surfaces to remove dirt and solvent.
- Lightly lubricate all external (except for the grip panels) and internal parts with gun oil.
- Dry outer surfaces of the firearm with a clean cloth.
- Remove any excess lubricant from the internal operating parts of the firearm.
- Reassemble the firearm.
- Retract and release the slide and operate the safety mechanism to ensure proper functioning.

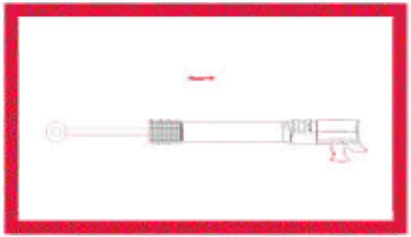

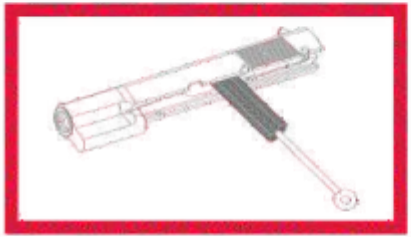

ZiG 14 PARTS LIST

NO.	CODE	PARTS DESCRIPTION
1	BRV-1	MAGAZINE CATCH
2	BRV-1.01	MAGAZINE CATCH SPRING
3	BRV-1.02	MAGAZINE CATCH PLUNGER
4	BRV-3	FRONT SIGHT
5	BRV-10	SEAR
6	BRV-10.02	SEAR SPRING PIN
7	BRV-11	HAMMER
8	BRV-11.01	HAMMER PIN
9	BRV-13	FIRING PIN STOP
10	BRV-15	BARREL BUSHING
11	BRV-16	REAR SIGHT
12	BRV-16a	REAR SIGHT SCREW
13	BRV-18	SAFETY LOCK
14	BRV-18.01	SAFETY LOCK PLUNGER SPRING
15	BRV-18.02	SAFETY LOCK PLUNGER
16	BRV-21	FIRING PIN
17	BRV-21.01	FIRING PIN SPRING
18	BRV-24	EJECTOR
19	BRV-31	BARREL
20	BRV-32	SLIDE
21	BRV-33	SEAR LEVER
22	BRV-33.01	SEAR LEVER PIN
23	BRV-35	RIGHT GRIP
24	BRV-35a	LEFT GRIP
25	BRV-40	FRAME
26	BRV-41	MAGAZINE SAFETY
27	BRV-41.01	MAGAZINE SAFETY SPRING
28	BRV-42	TRIGGER
29	BRV-42.01	TRIGGER SPRING
30	BRV-42.01a	MAGAZINE SAFETY PIN & TRIGGER SPRING PIN
31	BRV-42.02	TRIGGER PIN
32	BRV-43a	GRIP SCREW
33	BRV-44	TRIGGER LEVER
34	BRV-47	EXTRACTOR
35	BRV-47.01	EXTRACTOR SPRING
36	BRV-47.02	EXTRACTOR PIN
37	BRV-55	RECOIL SPRING GUIDE
38	BRV-55.01	RECOIL SPRING
39	BRV-56	SLIDE STOP
40	BRV-602	HAMMER STRUT ASSEMBLY
41	BRV-605	SEAR SPRING AND BUTTON
42	BRV-800	MAGAZINE

ZiG 14 EXPLODED VIEW

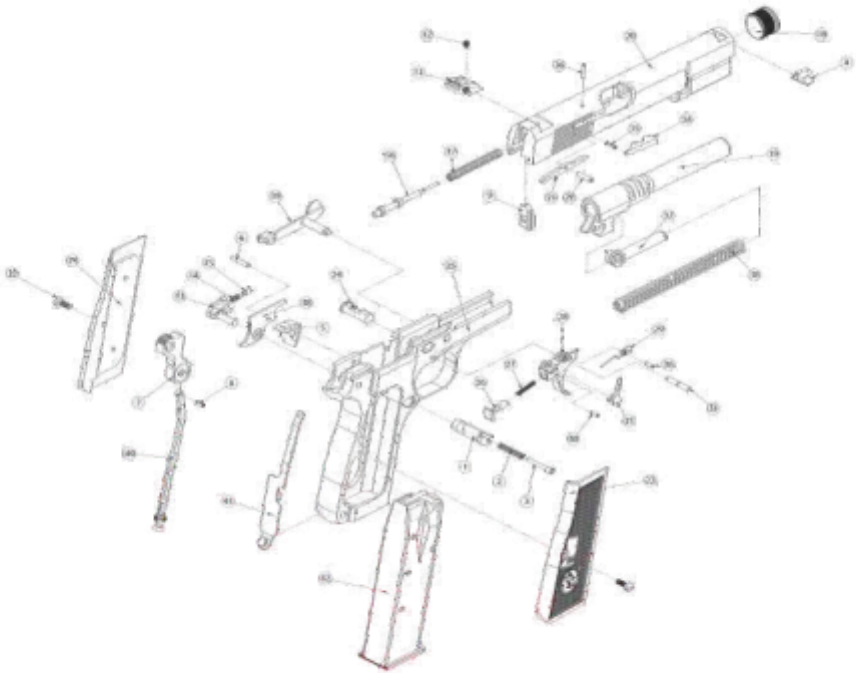

IMPORTER INFORMATION



Factory

Organize Sanayi Bölgesi 61900 Arsin - TRABZON / TURKEY Tel: +90 462 711 10 80

www.trabzonsilah.com tisas@trabzonsilah.com

Foreign Trade Department

De-gol Cad. 11 / 1 Tandoğan - ANKARA / TURKEY Tel : +90 312 213 75 09