Tisas®

www.tisasarms.com

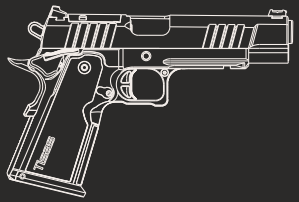

USER MANUAL HANDLING & SAFETY INSTRUCTIONS

EN

1911 DOUBLE STACK

READ THE INSTRUCTIONS AND WARNINGS IN THIS MANUAL CAREFULLY BEFORE USING THIS FIREARM; DO NOT DISCARD THIS MANUAL.


Tisas®
1993



WARNING

Please read this user manual carefully before using the firearm.

Do not use this firearm until you fully understand all of the safety instructions and handling procedures.

INDEX

GENERAL WARNINGS ____ 4
BEFORE USING YOUR FIREARM ____ 9
MAJOR COMPONENTS ____ 11
OVERVIEW OF THE SAFETY MECHANISMS ____ 12
LOADING ____ 14
FIRING ____ 15
UNLOADING ____ 16
DECOCKING THE HAMMER ____ 17
TROUBLESHOOTING ____ 18
DISASSEMBLY & ASSEMBLY ____ 21
CLEANING AND MAINTENANCE ____ 25
TECHNICAL SPECIFICATIONS ____ 27
PART LIST (CARRY9 DOUBLE STACK) ____ 28
EXPLODED DIAGRAM (CARRY9 DOUBLE STACK) ____ 29
PART LIST (DUTY9 DOUBLE STACK) ____ 30
EXPLODED DIAGRAM (DUTY9 DOUBLE STACK) ____ 31
IMPORTER INFORMATION ____ 32

GENERAL WARNINGS

⚠ WARNING

*Before loading or using your gun, read the user manual carefully from beginning to end. For both your own safety and the safety of third parties; Do not use your gun without carefully reading the safety rules and maintenance instructions section.
*Ignoring the safety, warnings and instructions in the user manual while using the gun may lead to death, serious injuries and/or material damage.
*The gun you purchased has "firearm" status. You are required to comply with all laws in your country regarding the purchase, carrying and use of firearms.

⚠ WARNING

TISAS DOES NOT HAVE ANY DIRECT AND/OR INDIRECT RESPONSIBILITY for the errors listed below while carrying, storing or using the user's weapon;
*Physical deformations that occur as a result of carelessness such as violation of laws, careless and inappropriate use, unauthorized changes to the product, damage to the product due to the use of non-standard, faulty, hand-loaded or inappropriate ammunition, abuse and non-compliance with the rules. Within the framework of the principles stated above, no liability is accepted for bodily injury, damage to personal or property rights, or malfunction of the product in similar cases caused by the user due to reasons not directly related to TISAS.
*Carry out and transport the gun only in its original packaging, complying with safety rules.
*Make sure that there are no explosives or flammable materials in the packaging with the gun.
*The lifespan of the product determined and announced by the ministry (period of parts supply and service after the production of the product is terminated) is 10 years.
*The items in the user manual will help you with storing your gun, carrying it safely, using it safely, cleaning and maintaining your gun. Before using your gun, read and understand all the rules in the user manual.

We also recommend that you receive training from professional instructors on the use of firearms.

⚠ IMPORTANT

SAFETY RULES FOR FIREARMS

1. Always treat a firearm as if it is loaded

Even if you know the firearm is unloaded, always assume it is loaded. The first thing you should do when you receive your gun (pointed it in a safe direction) is to pull back the slide set and visually inspect the chamber to determine whether your gun is loaded or not. If you don't know how to do this, don't use your gun. Note that removing the magazine does not guarantee that the firearm is unloaded because there may be a bullet in the chamber.

2. Always keep your finger out of the trigger guard and away from the trigger until you are ready to shoot your target

Do not put your finger inside the trigger guard until you aim and decide to shoot. By the way, the best place to support your finger is on the trigger guard, parallel to the body. This ensures that the shot moves safely towards its intended target.

3. Always point the firearm in a safe direction in front of and around your target

It is important to determine your true target, but it is equally important to know what is behind and in front of your target. Point your gun in a safe direction as an unintentional miss could result in injury or damage. When determining a safe direction, remember that a bullet can bounce off an object such as rock, water, or a wall, as well as pass through walls, panels, ceilings, and windows. Whether at home or outdoors, the safest direction is to aim at an angle towards a soft ground where the bullet will not ricochet. Never point your gun at a direction or at a living creature that you do not intend to shoot.

ADDITIONAL RULES FOR FIREARMS AND AMMUNITION

ALWAYS KEEP CHILDREN AND OTHERS SAFE BY KEEPING FIREARMS SAFE AND AWAY FROM UNAUTHORIZED PERSONS

Your gun is special to you. For this reason, keep the gun and ammunition in safe places out of reach of children or unauthorized persons. The gun and ammunition should be stored separately.

USE YOUR GUN AFTER READING THE OWNER'S MANUAL CAREFULLY

Do not use your gun without reading the warnings and instructions in the user manual. You should only use the gun when you fully understand how to operate it safely.

ALWAYS MAKE SURE YOUR GUN IS OPERATING SAFELY

Before shooting, make sure your gun is well-maintained and in working order. A gun that has not been used for a long time should be checked before shooting and, if necessary, made ready for shooting by maintaining it in accordance with the cleaning rules in the user manual.

ALWAYS USE CORRECT AMMUNITION

Never use inappropriate, faulty, substandard or incorrect ammunition. Use only ammunition recommended by the firearm manufacturer and appropriate for the caliber of your gun. The caliber of your gun is indicated on the barrel. Your ammunition should also be the same caliber. If you use the wrong ammunition, you may cause damage to your gun and physical injury to the user and/or third parties. In addition, this situation also eliminates the warranty given to the product.

WHEN CLEANING THE FIREARM, MAKE SURE IT IS NOT LOADED

The most common phrase used after a gun accidentally discharges is: "I was cleaning the firearm and it went off!" To avoid this situation, before cleaning your gun, it is important to follow the safety rules, remove the magazine from the gun and check that the "chamber" of the cartridge chamber of your gun is empty. The best way to do this is to visually check that the chamber is empty by pulling back the slide of a gun without a magazine, and to disassemble and clean the empty gun according to the rules. Never check whether your gun is loaded or unloaded with a full magazine or ammunition.

NEVER USE A FIREARM WHILE USING DRUGS OR ALCOHOL

Never use a firearm while drinking alcohol, drugs or drugs that can affect your senses, reflexes and decisions.

WEAR EYE AND EAR PROTECTION

Always wear appropriate eye and ear protection when handling firearms. Ear protection helps prevent hearing loss from firearms by reducing excessive levels of sound. Eye protection prevents ignition gases, ricochets, casings or any foreign object from damaging your eyes.

BEFORE USING YOUR PISTOL

Your TISAS pistol is semi-automatic, meaning that it is automatically reloaded and ready to fire again after each shot.

Your TISAS pistol can fire even without a magazine inserted. For that reason, ejecting the magazine or inserting an empty magazine does not make your firearm safe. Rather, to ensure your firearm is safe, you must eject the magazine, empty the chamber, and then visually inspect the chamber to ensure no cartridge or other obstruction is present.
Possess, carry and use your pistol in accordance with all relevant local, state, and federal laws. If you purchased this firearm secondhand, have it checked by a qualified armorer or gunsmith to ensure it is safe operate.

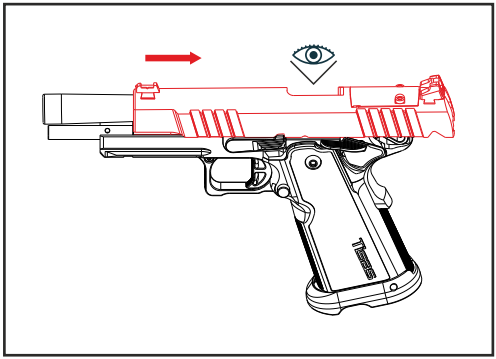

⚠ ATTENTION

Keep your firearm in a safe to operate place where children cannot access it. Always store your firearm unloaded and store the key to the lock separately from the ammunition.

⚠ IMPORTANT

When you are not using your gun, you can use a lock to prevent unauthorized use. To prevent use, the magazine of the gun should be removed and the lock should be used as shown in the picture.

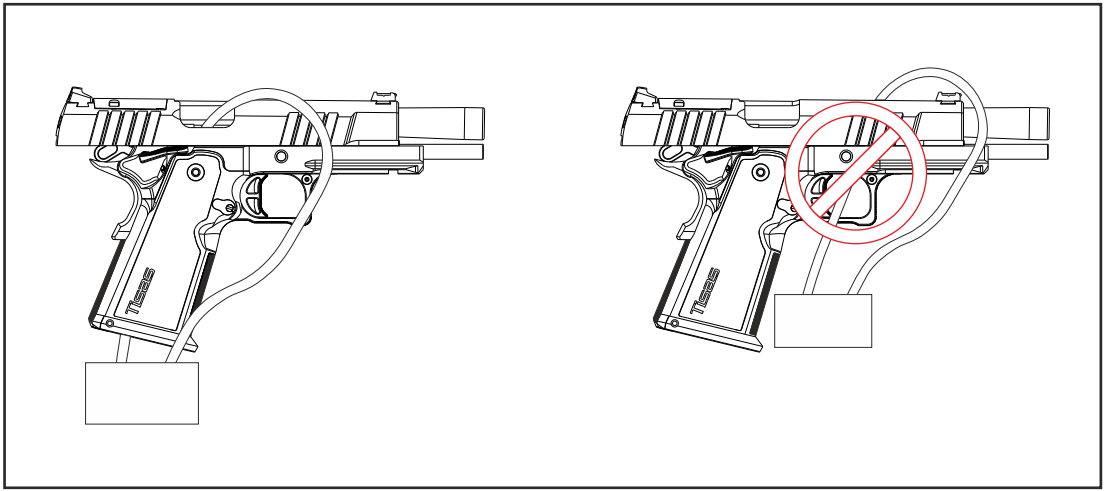

MAJOR COMPONENTS

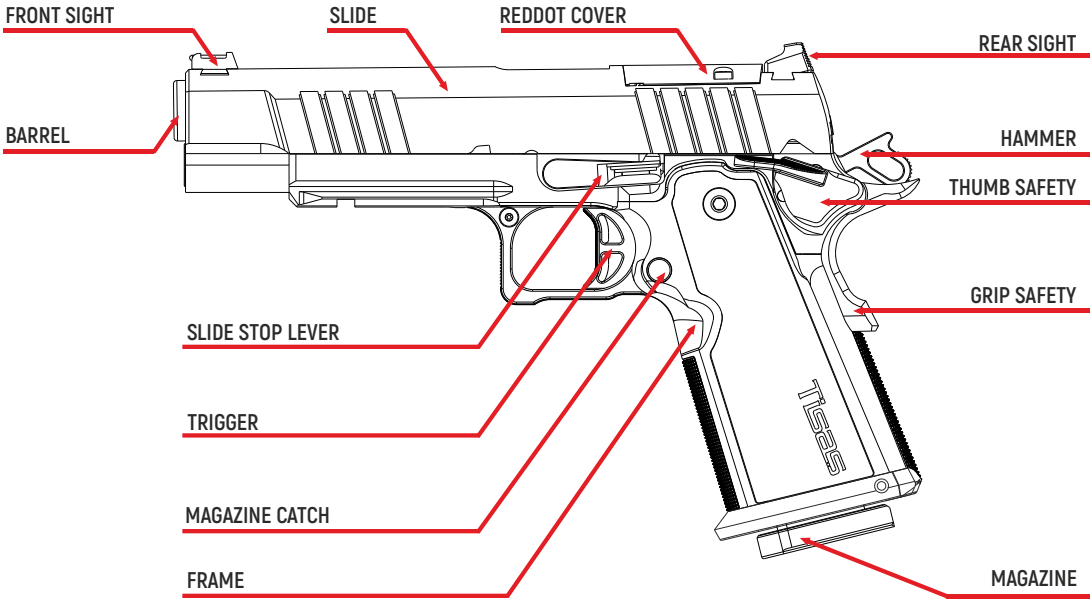

OVERVIEW OF SECURITY MECHANISMS

Your Tisas pistol is equipped with a grip safety. When engaged, this safety feature provides a block in front of the trigger mechanism that prevents firing. When the shooter grips the pistol firmly, this safety feature disengages and ceases to present a barrier to firing. However, disengagement of this feature has no bearing on the other safety features. In order for the pistol to fire, the thumb safety must also be disengaged. The thumb safety (2) can be engaged and disengaged when the hammer (1) is in the cocked position. However, when the hammer is in the forward position, the thumb safety cannot be engaged or disengaged.

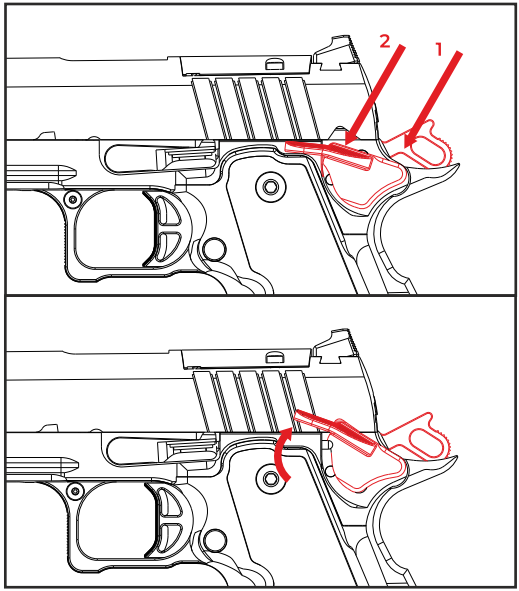

The hammer safety is engaged when the hammer is cocked and the thumb selector lever is switched into the up position. When the hammer is not cocked, this safety cannot be engaged, however, it can be engaged if the hammer is half-cocked.

If the hammer is fully-cocked and you want to engage the hammer safety, do the following:

* Safely unload the pistol and perform an inspection to ensure you have done so.

* Grip the pistol firmly and point it in a safe direction.

* While grasping the hammer firmly between two fingers, squeeze the trigger, and slowly guide the hammer to its half-cocked position.

* Lock the hammer by use of the thumb safety selector.

When the hammer safety is engaged, the hammer will not touch the firing pin.

⚠ ATTENTION

Do not attempt to engage the hammer safety when the chamber is loaded. The pistol will fire if the hammer slips from between your fingers, possibly resulting in injury or death to yourself or others.

LOADING

After making sure that your pistol is clean, and that the ammunition is clean, dry and of the correct caliber and type, hold the magazine with one hand and insert ammunition cartridges into the magazine with the other hand until the magazine is fully loaded.

Insert the magazine into the pistol, then retract the slide and release it. At this point, the chamber is loaded and your pistol is ready to fire.

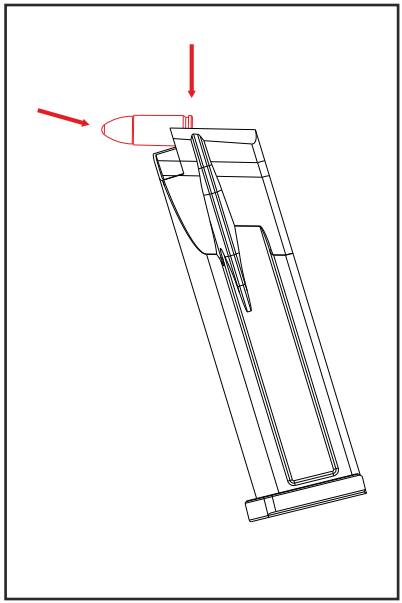

⚠ ATTENTION

Always keep your finger off the trigger while loading your firearm, and always point the barrel in a safe direction.

FIRING

*Aim your gun at your intended target and take the appropriate shooting position.
*Fix the gun exactly at the target point, at front sight level.
*When you are ready to shoot, place your finger on the trigger and pull the trigger slowly. The gun will fire that cartridge and then be ready to fire the next cartridge.
*To fire the next cartridge, pull the trigger again and repeat this process until you want to stop firing or until the ammunition runs out.
*When the ammunition runs out, the slide mechanism will be locked in the retracted position.

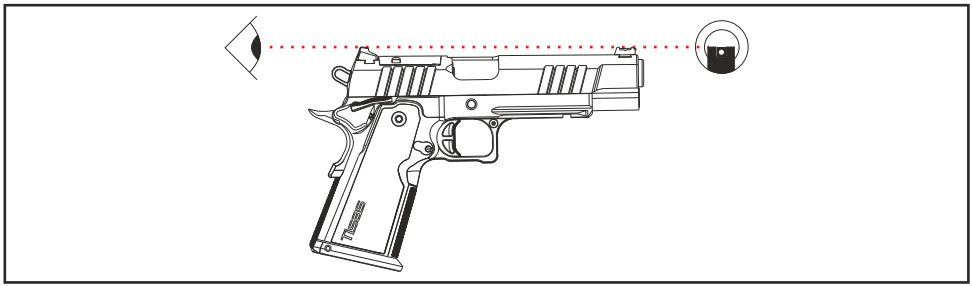

⚠ IMPORTANT

If you are untrained or inexperienced, and have a misfire, a malfunction, or in the event the firearm stops firing before the magazine is empty, unload the firearm and utilize the assistance of a qualified firearms instructor before attempting to operate your Tisas firearm.

UNLOADING

When the last cartridge in the magazine is fired, the slide locks in its retracted position.

To re-place the slide:

* Point the barrel in a safe direction.
* Remove the magazine by pressing the magazine release button.
* While the slide is in retracted position set back, visually inspect the chamber to make sure it is empty.
*By pressing down on the slide stop or pulling the slide slightly backwards, release the slide from the slide stop and slowly release it forward.

If you want to unload the cartridges in the magazine before it runs out, while the slide is in the forward position or the firing pin in the cocked position:

* Point the barrel in a safe direction and keep your finger away from the trigger.
* Remove the magazine by pressing the magazine release button.
* Pull the slide back again and ensure that ammunition comes out of the chamber.
* Slowly release the slide to its forward position.

⚠ ATTENTION

Never touch the trigger when loading or unloading the firearm. To ensure the chamber is empty, remove the magazine and then visually inspect the chamber by pulling the slide backwards.

DECOCKING THE HAMMER

* Point the barrel in a safe direction and make sure your pistol is unloaded.

* Grip the pistol properly with your dominant hand as if preparing to fire.

* Grasp the hammer between the thumb and index finger of your other hand.

* Squeeze the trigger and slowly push the hammer until the hammer safety is engaged. Do not release the hammer until the hammer fits into its half-cocked position.

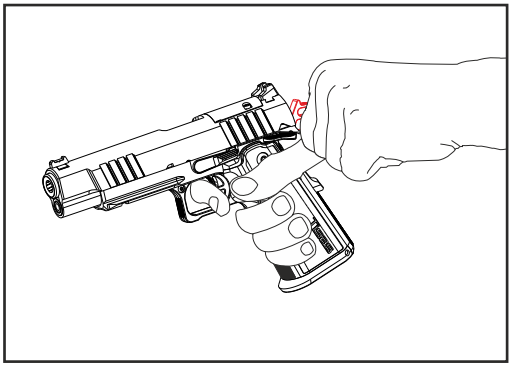

⚠ ATTENTION

Always store and carry your pistol with its chamber empty and its hammer safety engaged. When your pistol is loaded, do not try to release the hammer, as doing so may fire your pistol and cause injury or death to yourself or others.

TROUBLESHOOTING

⚠ IMPORTANT

To ensure your gun is unloaded, point the barrel in a safe direction, remove the magazine and then visually inspect the barrel chamber by pulling back the slide.

Slide will not lock forward in to battery:

* Do not attempt to manually force the slide into battery.
* Point your barrel in a safe direction.
* Eject the magazine.
* Retract the slide to facilitate extraction and ejection of the chambered cartridge.
* If the cartridge does not extract and eject, lock the slide in its retracted position.
* Inspect the cartridge and carefully attempt manual extraction/ejection. If the cartridge cannot be extracted/ejected, seek the assistance of a qualified armorer or gunsmith.

⚠ ATTENTION

If a bullet is in the barrel, never attempt to shoot it out by using another round. This can generate high pressure, damage the pistol and cause serious injury.

Unable to fire due to ammunition:

* If the slide is not pushed back far enough, the empty cartridge case may not be ejected or the bullet may not be fed.
* Stop shooting immediately.
* Discharge your weapon safely. Retract the slide and lock it from behind.

* Check both the barrel and chamber to determine if there is a malfunction.
* The low pressure ammunition in the barrel may not have left the barrel, but may have gotten stuck and blocked the barrel. Do not fire the second bullet as soon as you hear the sound of the low-pressure bullet. Therefore, point your gun in a safe direction. Visually inspect the inside of the barrel to verify that the bullet has left the barrel. Firing the second cartridge before the bullet leaves the barrel may disable your barrel and weapon, and may also harm the shooter during the shot. Perform this check following the safety rules for discharging the gun.
* If ammunition is not ejected or cannot be removed, lock the slide in the retracted position.
* Inspect the cartridge and carefully attempt manual extraction/ejection. If the cartridge cannot be extracted/ejected, seek the assistance of a qualified armorer or gunsmith.

⚠ IMPORTANT

If there is an obstruction in the barrel chamber and/or barrel and you continue shooting, this may result in damage to your firearm, physical injuries, and even death to the user and/or third parties. TISAS is absolutely not responsible for any direct and/or indirect damages that may occur due to this and similar wrong and erroneous practices of the users. Additionally, this voids the warranty given to the product.

Troubleshooting other malfunctions:

* Replace any damaged magazines or ammunition cartridges.
* Inspect and clean the chamber. Clean the magazine.
* Clean the thumb safety selector and the cartridge ramp.
* If after taking these steps your pistol continues to malfunction, obtain assistance from a qualified armorer or gunsmith.

⚠ ATTENTION

Carry out all troubleshooting operations in a safe location with the firearm pointed in a safe direction.

DISASSEMBLY AND ASSEMBLY

Disassembly for Model Double Stack

* Point the barrel in a safe direction and remove the magazine.
* Open the slide to ensure the chamber is empty and visually inspect the chamber.
* Engage slide lock with slide fully opened. (1)
* Install slide disassembly toll within small hole on the recoil assembly. (2)
* Remove slide stop. (3)
* Remove the slide by slowly ppuching / pulling it forward off the frame. (4)

NOTE

Keep your hand on the recoil assembly as it is under pressure. If the tool is removed, the spring may eject and could lead to injury.

- Remove the recoil assembly
- Remove the barrel.

ASSEMBLY OD THE TISAS DOUBLE STACK

-Follow the steps for disassembly in reverse order.

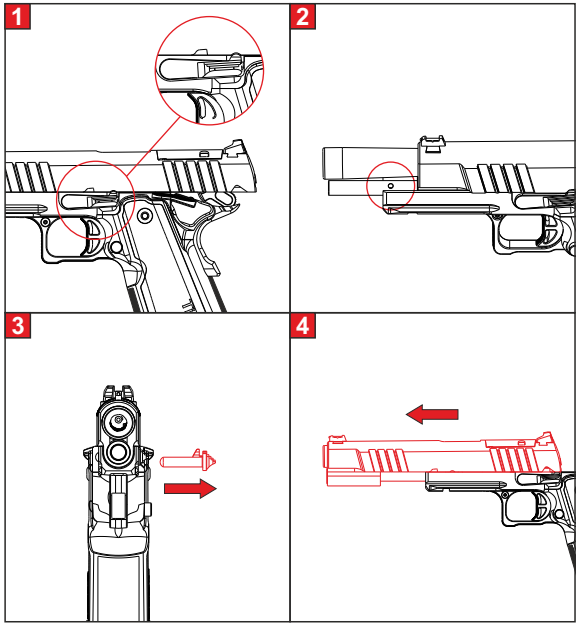

NOTE

Keep your hand on the recoil spring as it is under pressure. If you lose your grip, the spring may eject and could lead to injury.

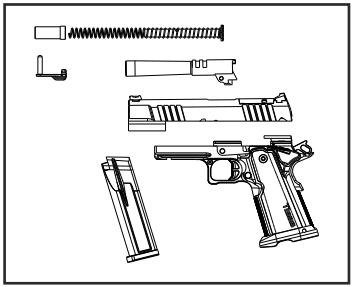

* Slide Stop
* Recoil Spring And Guide
* Slide
* Magazine
* Frame

Follow the steps for disassembly in reverse order.

⚠ ATTENTION

Take care to maintain firm control of the recoil spring plug during assembly. Failure to do so may result in injury as the recoil spring plug is propelled by force of the recoil spring.Also, ensure correct positioning of the barrel link during reassembly.

Assemble The Red Dot Sight

Required auxiliary materials: Torque wrench 10.2 in-lb 11.9 in-lb or screw bit 2.5 mm.

1. Adjust torque wrench.
2. Loosen screws and remove.
3. Remove slide plate.
4. Insert reddot in slide

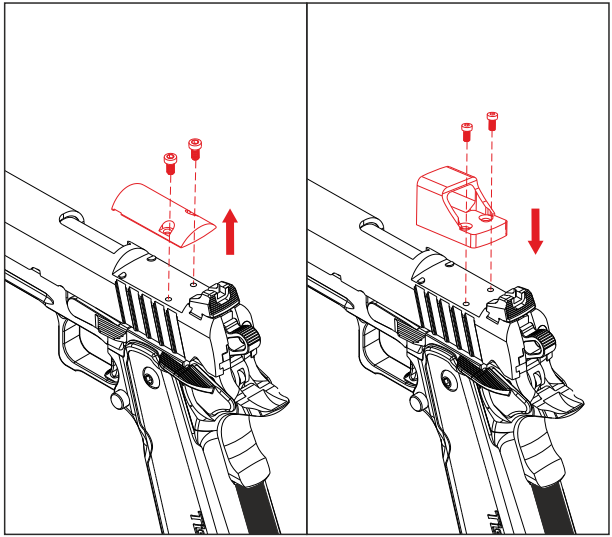

ASSEMBLY

Follow the steps for disassembly in reverse order.

Assemble The Red Dot Sight

* Pull the slide to the back and push the slide stop up.
* Push the firing pin forward by using a tool
* Push the firing pin stop downwards, do not remove completely!

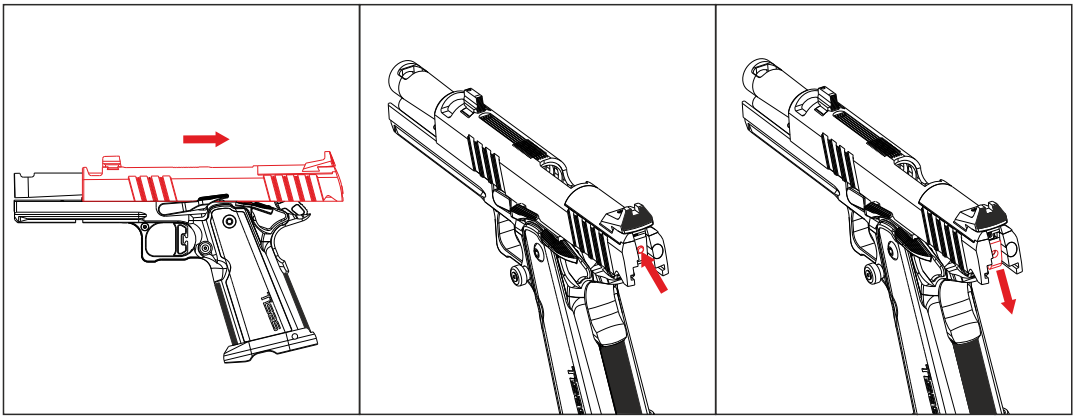

Assemble The Red Dot Sight

Required auxiliary materials: Torque wrench or screw bit 1.5 and 2.0 mm.

1. Remove the reddot screw using a 1.5 mm allen wrench.
2. Place the Reddot adapter in place and secure it with the screw.
3. Place the reddot in place and secure it with the screw.
4. When installing the reddot adapter and the screws to be attached to the reddot, we recommend using threadlocking fluid.

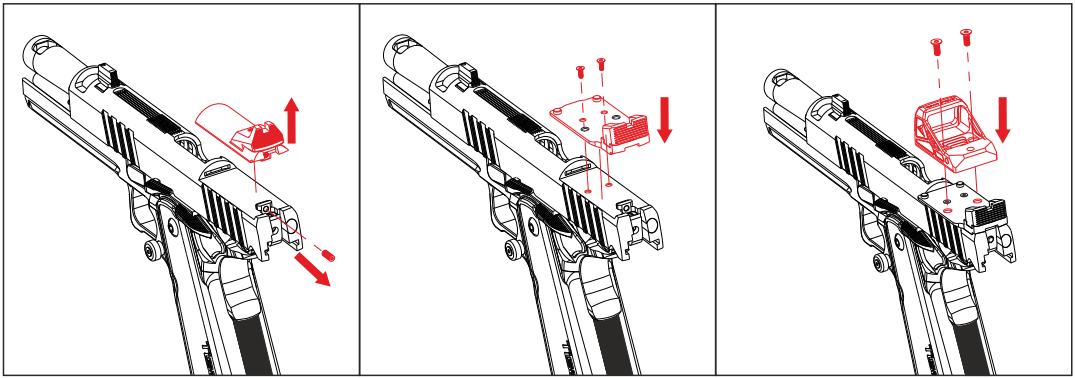

MAGWELL ASSEMBLY

* To mount the magazine well, remove the cock bracket pin with the help of a punch. (1)
* Mount the magwell to the body from front to back. (2)
* Fix the magazine well to the body using the magazine well pin. (3)

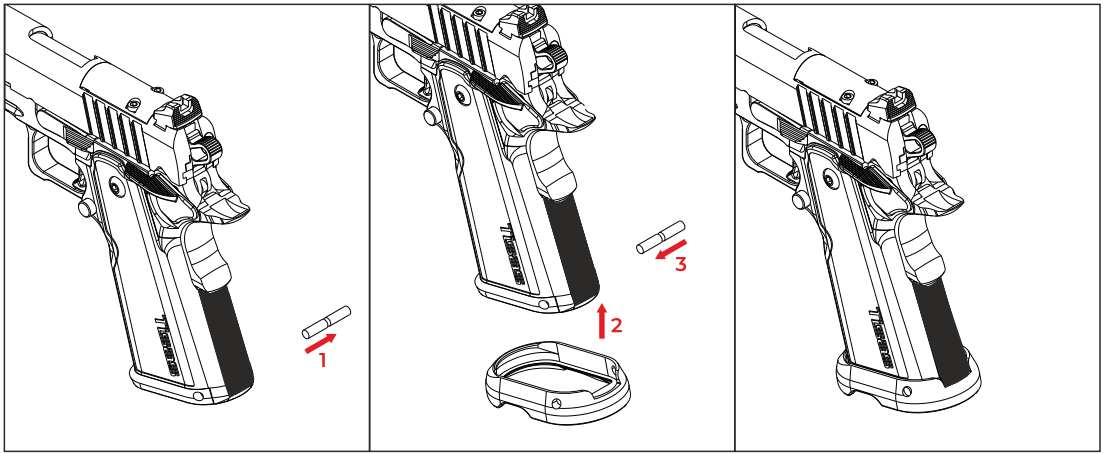

CLEANING AND MAINTENANCE

To ensure that your gun is always ready to fire and has a long life, follow the rules below and maintain it after each shot, whenever you feel it is affected by external factors such as moisture or dust, or once a month.

Materials required for cleaning:

* Cleaning cloth
* Gun oil
* Brush
* Ramrod

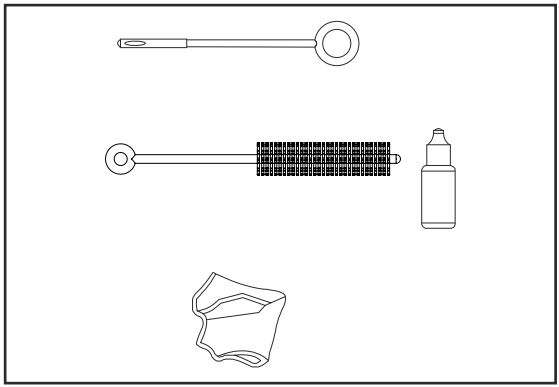

⚠ WARNING

Use appropriate personal protective equipment when cleaning and never use solvents.

* Remove the magazine.
* Point the barrel in a safe direction and make sure your gun is unloaded.
* Disassemble the gun.
* Wipe dirty surfaces, parts, slide channels and the inside of the barrel with cleaning oil using a brush.
* Do not use a brush from both ends of the barrel, clean only from the end of the chamber.
* Do not rotate the brush left and right in the barrel, use it linearly.
* Lightly lubricate all external and internal parts with gun oil.
* Dry the inside of the barrel with a clean cloth.
* Dry the outer surfaces of the gun with a clean cloth.
* Remove excess oil from the internal working parts of the gun.
* Reassemble the gun.

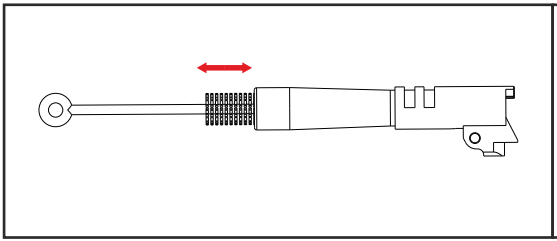

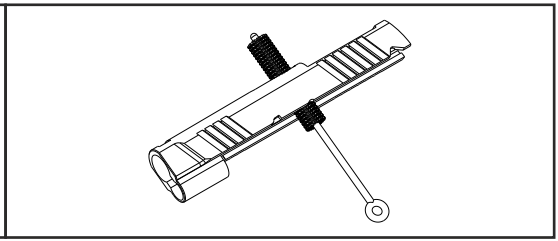

TECHNICAL SPECIFICATIONS

	CARRY 9 DOUBLE STACK	DUTY 9 DOUBLE STACK	NIGHT STALKER 9 DOUBLE STACK
CALIBER	9x19 mm	9x19 mm	9x19 mm
MAGAZINE CAPACITY	17 Fişek	17 Fişek	17 Fişek
BARREL LENGTH	109 mm	127.5 mm	127.5 mm
LENGTH	200.9 mm	219.4 mm	223.7 mm
HEIGHT	146.4 mm	146.4 mm	148.7 mm
WEIGHT (EMPTY MAGAZINE)	940 gr (± 10 gr.)	1010 gr (± 10 gr.)	1000 gr (± 10 gr.)
WIDTH	38.3 mm	38.3 mm	41.15 mm
ACTION TYPE	Semi Automatic	Semi Automatic	Semi Automatic
SAFETY SYSTEMS	Ambidextrous Thumb Safety, Grip Safety	Ambidextrous Thumb Safety, Grip Safety	Ambidextrous Thumb Safety, Grip Safety
TRIGGER WEIGHT	2.500gr.	2.500gr.	2.500gr.

PART LIST (CARRY9 DOUBLE STACK)

NO.	CODE	PART NAME
1	C11-1	MAGAZINE CATCH
2	C11-1.01	MAGAZINE CATCH SPRING
3	C11-1.02	MAGAZINE CATCH LOCK
4	C11-2	MAINSPRING HOUSING
5	C19-2.01	MAINSPRING
6	C11-2.02	MAIN SPRING CAP
7	C11-2.03	LOCKING BOLT
8	C11-2.04	MAINSPRING RETAINER
9	C11-2.05	MAINSPRING HOUSING RETAINER PIN
10	C11-3	HAMMER STRUT
11	C11-3.01	HAMMER STRUT PIN
12	C11-4	SEAR
13	C11-4.01	SEAR PIN
14	C11-5	HAMMER
15	C11-5.01a	HAMMER PIN
16	C11-6	REAR SIGHT
17	ZT-16a	REAR SIGHT SCREW
18	C11-7	THUMB SAFETY LEFT
19	C11-7.01	SAFETY PLUNGER
20	C11-7.02	SLIDE STOP PLUNGER
21	C11-7.03	THUMB SAFETY / SLIDE STOP SPRING
22	C11-8	BEAVERTAIL GRIP SAFETY
23	C19-9	STRIKER
24	C11-9.01	STIKER SPRING
25	C19-10	EJECTOR
26	C11-10.01	EJECTOR PIN
27	C19-12	SLIDE STOP
28	C11-13	BARREL LINK
29	C11-13.01	BARREL LINK PIN
30	LV-14	BARREL
31	LV-16	SLIDE
32	C11-703a	TRIGGER
33	C11-21	GRIP
34	C11-18a	TRIGGER GUARD SCREW
35	C11-18a.01	TRIGGER GUARD BUSHING
36	LV-21.01	FRAME
37	C11-23	GRIP SCREW
38	C11-23a	GRIP SCREW SCREW BUSHING
39	LP-24	RECOIL SPRING GUIDE
40	C11-24.01	RECOIL SPRING PLUG
41	LV-24.02	RECOIL SPRING
42	C19-25	EXTRACTOR
43	C11-26	DISCONNECTOR
44	C11-28	STRIKER LOCKING PLATE
45	C11-32	SEAR SPRING
46	C11-33a	FRONT SIGHT
47	C11-34	THUMB SAFETY RIGHT
48	C11-35	RMSC COVER PLATE
49	C11-35.01	RMSC COVER PLATE SCREW (X2)

EXPLODED DIAGRAM (CARRY 9 DOUBLE STACK)

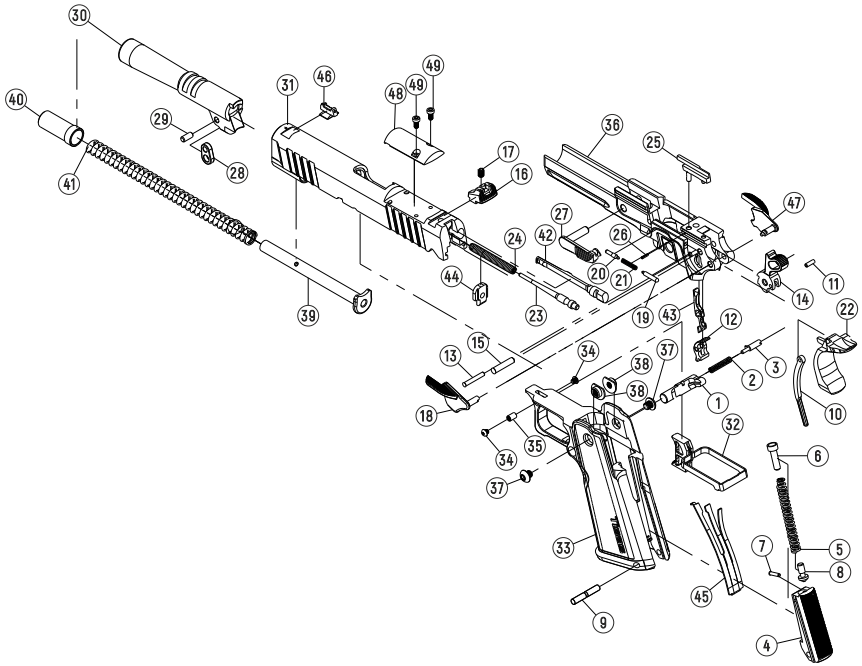

PART LIST (DUTY9 DOUBLE STACK)

NO.	CODE	PART NAME
1	C11-1	MAGAZINE CATCH
2	C11-1.01	MAGAZINE CATCH SPRING
3	C11-1.02	MAGAZINE CATCH LOCK
4	C11-2	MAINSPRING HOUSING
5	C19-2.01	MAINSPRING
6	C11-2.02	MAIN SPRING CAP
7	C11-2.03	LOCKING BOLT
8	C11-2.04	MAINSPRING RETAINER
9	C11-2.05	MAINSPRING HOUSING RETAINER PIN
10	C11-3	HAMMER STRUT
11	C11-3.01	HAMMER STRUT PIN
12	C11-4	SEAR
13	C11-4.01	SEAR PIN
14	C11-5	HAMMER
15	C11-5.01a	HAMMER PIN
16	C11-6	REAR SIGHT
17	C11-6.0a	REAR SIGHT SCREW
18	C11-7	THUMB SAFETY LEFT
19	C11-7.01	SAFETY PLUNGER
20	C11-7.02	SLIDE STOP PLUNGER
21	C11-7.03	THUMB SAFETY / SLIDE STOP SPRING
22	C11-8	BEAVERTAIL GRIP SAFETY
23	C11-9	STRIKER
24	C11-9.01	STIKER SPRING
25	C19-10	EJECTOR
26	C11-10.01	EJECTOR PIN
27	C19-12	SLIDE STOP
28	C11-13	BARREL LINK
29	C11-13.01	BARREL LINK PIN
30	C19-14	BARREL
31	C19-16	SLIDE
32	C11-703a	TRIGGER
33	C11-21	GRIP
34	C11-18a	TRIGGER GUARD SCREW
35	C11-18a.01	TRIGGER GUARD BUSHING
36	C19-21.01	FRAME
37	C11-23	GRIP SCREW
38	C11-23a	FRAME GRIP SCREW BUSHING
39	C11-24	RECOIL SPRING GUIDE
40	C11-24.01	RECOIL SPRING PLUG
41	C19-24.02	RECOIL SPRING
42	C19-25	EXTRACTOR
43	C11-26	DISCONNECTOR
44	C11-28	STRIKER LOCKING PLATE
45	C11-32	SEAR SPRING
46	C11-33a	FRONT SIGHT
47	C11-34	THUMB SAFETY RIGHT
48	C11-35	RMSC COVER PLATE
49	C11-35.01	RMSC COVER PLATE SCREW (X2)

EXPLODED DIAGRAM (DUTY 9 DOUBLE STACK)

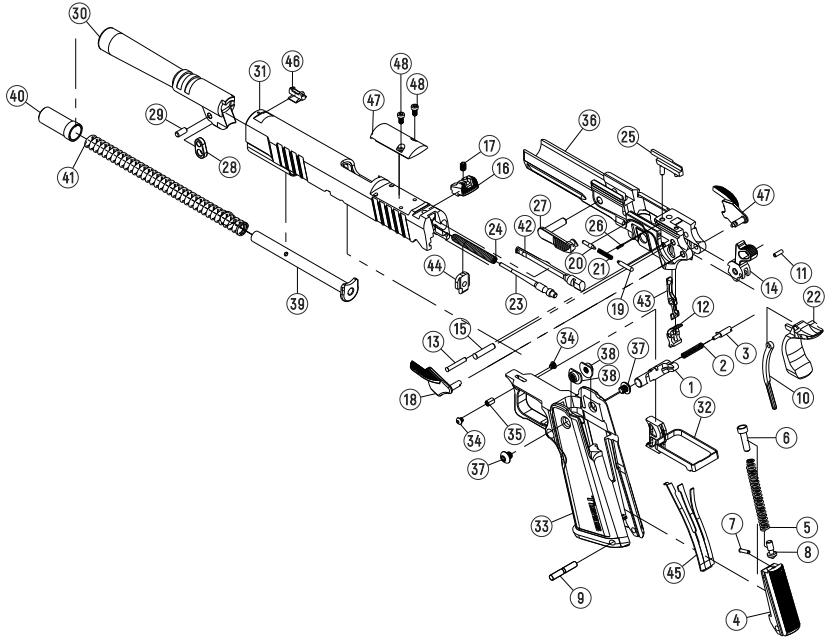

IMPORTER INFORMATION

NOTES


Tisas®
1993

© ALL RIGHTS RESERVED ● UPDATED - 2025/06

/tisasarms

TİSAŞ®

1993

FACTORY
Organize Sanayi Bölgesi 61900 Arsin/TRABZON Tel: 0 462 711 10 80 Fax: 0 462 711 17 87

FOREIGN TRADE DEPARTMENT
Mebuslarevi Mah. Dögol Cad. No: 13/1 Çankaya/ANKARA Tel: 0 312 213 75 09 Fax: 0 312 213 78 06

FOREIGN TRADE DEPARTMENT
Gümüşsuyu Mah. İnönü Cad. Marmara Apt. Blok No: 45/a Beyoğlu/İSTANBUL Tel: 0 212 243 42 05 Fax: 0 212 251 59 32