Tisas®

www.tisasarms.com

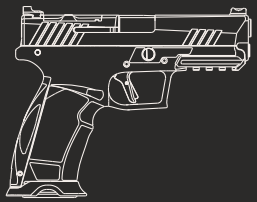

USER MANUAL HANDLING & SAFETY INSTRUCTIONS

EN

PX-9 GEN3

READ THE INSTRUCTIONS AND WARNINGS IN THIS MANUAL CAREFULLY BEFORE USING THIS FIREARM; DO NOT DISCARD THIS MANUAL.


Tisas®
1993

Tisas®

1993



WARNING

Please read this user manual carefully before using the firearm.

Do not use this firearm until you fully understand all of the safety instructions and handling procedures.

INDEX

GENERAL WARNINGS ____ 4
BEFORE USING YOUR FIREARM ____ 7
MAJOR COMPONENTS ____ 8
OVERVIEW OF THE SAFETY MECHANISMS ____ 9
LOADING ____ 11
FIRING ____ 12
UNLOADING ____ 13
TROUBLESHOOTING ____ 14
DISASSEMBLY & ASSEMBLY ____ 17
CLEANING AND MAINTENANCE ____ 21
TECHNICAL SPECIFICATIONS ____ 23
PARTS LIST (PX9-GEN3) ____ 24
EXPLODED DIAGRAM (PX9-GEN3) ____ 25
PARTS LIST (PX9-GEN3 TH) ____ 26
EXPLODED DIAGRAM (PX9-GEN3 TH) ____ 27
IMPORTER INFORMATION ____ 28

GENERAL WARNINGS

⚠ WARNING

*Before loading or using your gun, read the user manual carefully from beginning to end. For both your own safety and the safety of third parties; Do not use your gun without carefully reading the safety rules and maintenance instructions section.
*Ignoring the safety, warnings and instructions in the user manual while using the gun may lead to death, serious injuries and/or material damage.
*The gun you purchased has "firearm" status. You are required to comply with all laws in your country regarding the purchase, carrying and use of firearms.

⚠ WARNING

TISAS DOES NOT HAVE ANY DIRECT AND/OR INDIRECT RESPONSIBILITY for the errors listed below while carrying, storing or using the user's weapon;
*Physical deformations that occur as a result of carelessness such as violation of laws, careless and inappropriate use, unauthorized changes to the product, damage to the product due to the use of non-standard, faulty, hand-loaded or inappropriate ammunition, abuse and non-compliance with the rules. Within the framework of the principles stated above, no liability is accepted for bodily injury, damage to personal or property rights, or malfunction of the product in similar cases caused by the user due to reasons not directly related to TISAS.
*Carry out and transport the gun only in its original packaging, complying with safety rules.
*Make sure that there are no explosives or flammable materials in the packaging with the gun.
*The lifespan of the product determined and announced by the ministry (period of parts supply and service after the production of the product is terminated) is 10 years.
*The items in the user manual will help you with storing your gun, carrying it safely, using it safely, cleaning and maintaining your gun. Before using your gun, read and understand all the rules in the user manual.

We also recommend that you receive training from professional instructors on the use of firearms.

⚠ IMPORTANT

SAFETY RULES FOR FIREARMS

1. Always treat a firearm as if it is loaded

Even if you know the firearm is unloaded, always assume it is loaded. The first thing you should do when you receive your gun (pointed it in a safe direction) is to pull back the slide set and visually inspect the chamber to determine whether your gun is loaded or not. If you don't know how to do this, don't use your gun. Note that removing the magazine does not guarantee that the firearm is unloaded because there may be a bullet in the chamber.

2. Always keep your finger out of the trigger guard and away from the trigger until you are ready to shoot your target

Do not put your finger inside the trigger guard until you aim and decide to shoot. By the way, the best place to support your finger is on the trigger guard, parallel to the body. This ensures that the shot moves safely towards its intended target.

3. Always point the firearm in a safe direction in front of and around your target

It is important to determine your true target, but it is equally important to know what is behind and in front of your target. Point your gun in a safe direction as an unintentional miss could result in injury or damage. When determining a safe direction, remember that a bullet can bounce off an object such as rock, water, or a wall, as well as pass through walls, panels, ceilings, and windows. Whether at home or outdoors, the safest direction is to aim at an angle towards a soft ground where the bullet will not ricochet. Never point your gun at a direction or at a living creature that you do not intend to shoot.

ADDITIONAL RULES FOR FIREARMS AND AMMUNITION

ALWAYS KEEP CHILDREN AND OTHERS SAFE BY KEEPING FIREARMS SAFE AND AWAY FROM UNAUTHORIZED PERSONS

Your gun is special to you. For this reason, keep the gun and ammunition in safe places out of reach of children or unauthorized persons. The gun and ammunition should be stored separately.

USE YOUR GUN AFTER READING THE OWNER'S MANUAL CAREFULLY

Do not use your gun without reading the warnings and instructions in the user manual. You should only use the gun when you fully understand how to operate it safely.

ALWAYS MAKE SURE YOUR GUN IS OPERATING SAFELY

Before shooting, make sure your gun is well-maintained and in working order. A gun that has not been used for a long time should be checked before shooting and, if necessary, made ready for shooting by maintaining it in accordance with the cleaning rules in the user manual.

ALWAYS USE CORRECT AMMUNITION

Never use inappropriate, faulty, substandard or incorrect ammunition. Use only ammunition recommended by the firearm manufacturer and appropriate for the caliber of your gun. The caliber of your gun is indicated on the barrel. Your ammunition should also be the same caliber. If you use the wrong ammunition, you may cause damage to your gun and physical injury to the user and/or third parties. In addition, this situation also eliminates the warranty given to the product.

WHEN CLEANING THE FIREARM, MAKE SURE IT IS NOT LOADED

The most common phrase used after a gun accidentally discharges is: "I was cleaning the firearm and it went off!" To avoid this situation, before cleaning your gun, it is important to follow the safety rules, remove the magazine from the gun and check that the "chamber" of the cartridge chamber of your gun is empty. The best way to do this is to visually check that the chamber is empty by pulling back the slide of a gun without a magazine, and to disassemble and clean the empty gun according to the rules. Never check whether your gun is loaded or unloaded with a full magazine or ammunition.

NEVER USE A FIREARM WHILE USING DRUGS OR ALCOHOL

Never use a firearm while drinking alcohol, drugs or drugs that can affect your senses, reflexes and decisions.

WEAR EYE AND EAR PROTECTION

Always wear appropriate eye and ear protection when handling firearms. Ear protection helps prevent hearing loss from firearms by reducing excessive levels of sound. Eye protection prevents ignition gases, ricochets, casings or any foreign object from damaging your eyes.

BEFORE USING YOUR PISTOL

Your TISAS firearm is semi-automatic, and single action.

Your TISAS firearm can fire even without a magazine inserted. For that reason, ejecting the magazine or inserting an empty magazine does not make your firearm safe. Rather, to ensure your firearm is safe, you must eject the magazine, empty the chamber, and then visually inspect the chamber to ensure no cartridge or other obstruction is present.
Possess, carry and use your firearm in accordance with all relevant local, state, and federal laws. If you purchased this firearm secondhand, have it checked by a qualified armorer or gunsmith to ensure it is safe to operate.

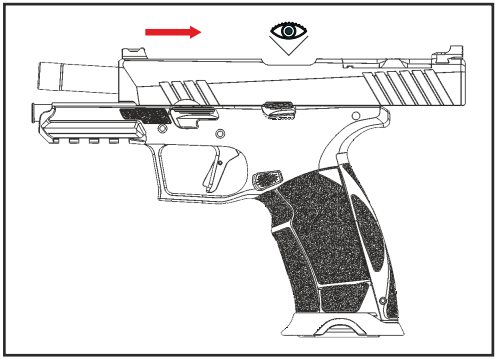

⚠ ATTENTION

Keep your firearm in a safe to operate place where children cannot access it. Always store your firearm unloaded and store the key to the lock separately from the ammunition.

MAJOR COMPONENTS

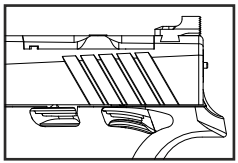

- AMBIDEXTROUS THUMB SAFETY (OPTIONAL)
- TARGET GRIP OF PX-9 GEN3 / GEN3S PROVIDES 27 DIFFERENT HOLDING POSSIBILITIES

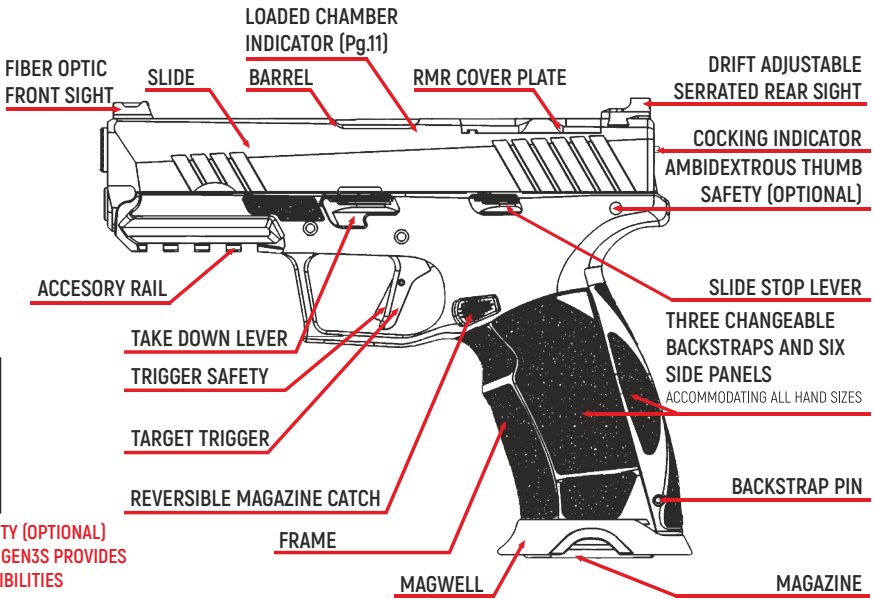

OVERVIEW OF SECURITY MECHANISMS

The frame mounted trigger safety also helps prevent accidental discharge if the PX-9 is struck or dropped by blocking the rearward movement of the trigger assembly thereby immobilizing the trigger bar, unless the entire trigger is pulled back to the rear. With the trigger bar unable to press downward on the sear release catch, the catch remains upright and holds the cocked firing pin assembly in place.

Your TISAS firearm has a loaded chamber indicator. The indicator allows you to observe whether a cartridge is in the chamber or not. When a cartridge is in the chamber, the indicator moves out. It also allows you to check it manually while firing at night.

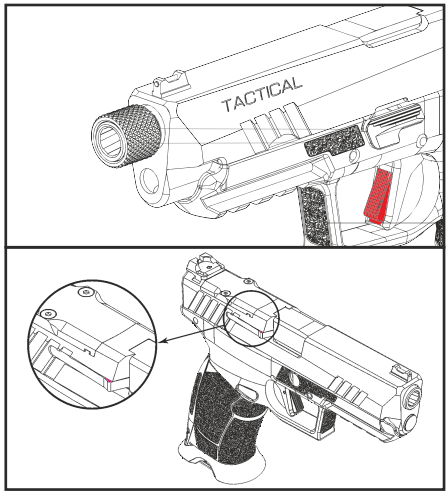

Your TISAS ZIGANA PX-9 GEN3 firearm is equipped with a thumb safety (optional) which can be operated by right and left handed users (ambidextrous). The thumb safety is activated by pressing the lever upward. When it is activated, the firing mechanism is blocked and the firearm does not fire. The thumb safety can be activated if the firearm is cocked or not cocked.

Your TISAS firearm is equipped with firing pin block. The firing pin block prevents the firing pin from moving forward unless the trigger is depressed.

Your TISAS firearm has a cocking indicator in the rear of the slide. When the firearm is cocked, the pin protrudes out of the rear of the slide.

⚠ ATTENTION

The cocking indicator does not always mean that the firearm is loaded. However, when the pin is out, treat as if it is loaded.

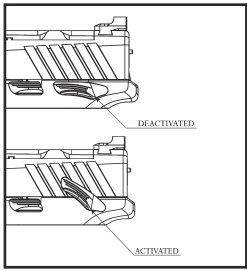

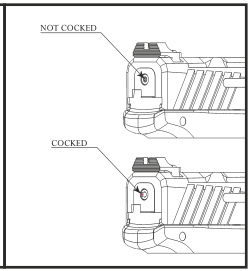

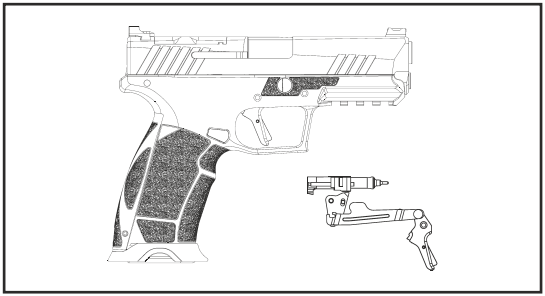

LOADING

After making sure that your pistol is clean, and that the ammunition is clean, dry and of the correct caliber and type, hold the magazine with one hand and insert ammunition cartridges into the magazine with the other hand until the magazine is fully loaded.

Insert the magazine into the pistol, then retract the slide and release it. At this point, the chamber is loaded and your pistol is ready to fire.

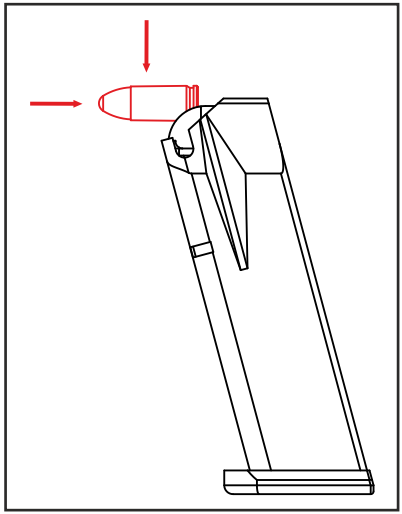

⚠ ATTENTION

Always keep your finger off the trigger while loading your firearm, and always point the barrel in a safe direction.

FIRING

* Grip your firearm firmly.
* Point the firearm at your intended target and assume a proper shooting stance.
* Aim the firearm precisely at your intended point of impact within the larger target.
* When you are ready to fire, place your finger on the trigger and lightly squeeze the trigger. The firearm will fire one cartridge, and then ready itself to fire a subsequent cartridge.

Squeeze the trigger again to fire this subsequent cartridge, and repeat this procedure until you wish to stop firing or until you run out of ammunition, at which point the slide will lock in its retracted position.

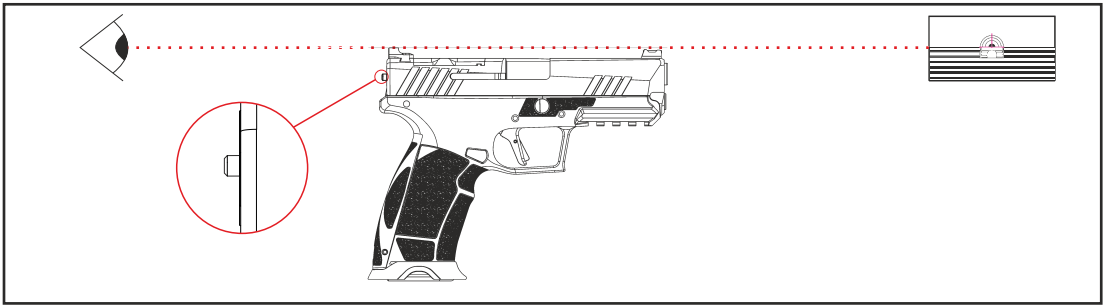

⚠ IMPORTANT

If you are untrained or inexperienced, and have a misfire, a malfunction, or in the event the firearm stops firing before the magazine is empty, unload the firearm and utilize the assistance of a qualified firearms instructor before attempting to operate your Tisas

UNLOADING

When the last cartridge in the magazine is fired, the slide locks in its retracted position.

To re-place the slide:

* Point the barrel in a safe direction.
* Remove the magazine by pressing the magazine release button.
* While the slide is in retracted position set back, visually inspect the chamber to make sure it is empty.
*By pressing down on the slide stop or pulling the slide slightly backwards, release the slide from the slide stop and slowly release it forward.

If you want to unload the cartridges in the magazine before it runs out, while the slide is in the forward position or the firing pin in the cocked position:

* Point the barrel in a safe direction and keep your finger away from the trigger.
* Remove the magazine by pressing the magazine release button.
* Pull the slide back again and ensure that ammunition comes out of the chamber.
* Slowly release the slide to its forward position.

⚠ ATTENTION

Never touch the trigger when loading or unloading the firearm. To ensure the chamber is empty, remove the magazine and then visually inspect the chamber by pulling the slide backwards.

TROUBLESHOOTING

⚠ IMPORTANT

To ensure your gun is unloaded, point the barrel in a safe direction, remove the magazine and then visually inspect the barrel chamber by pulling back the slide.

Slide will not lock forward in to battery:

* Do not attempt to manually force the slide into battery.
* Point your barrel in a safe direction.
* Eject the magazine.
* Retract the slide to facilitate extraction and ejection of the chambered cartridge.
* If the cartridge does not extract and eject, lock the slide in its retracted position.
* Inspect the cartridge and carefully attempt manual extraction/ejection. If the cartridge cannot be extracted/ejected, seek the assistance of a qualified armorer or gunsmith.

⚠ ATTENTION

If a bullet is in the barrel, never attempt to shoot it out by using another round. This can generate high pressure, damage the pistol and cause serious injury.

Unable to fire due to ammunition:

* If the slide is not pushed back far enough, the empty cartridge case may not be ejected or the bullet may not be fed.
* Stop shooting immediately.
* Discharge your weapon safely. Retract the slide and lock it from behind.

* Check both the barrel and chamber to determine if there is a malfunction.
* The low pressure ammunition in the barrel may not have left the barrel, but may have gotten stuck and blocked the barrel. Do not fire the second bullet as soon as you hear the sound of the low-pressure bullet. Therefore, point your gun in a safe direction. Visually inspect the inside of the barrel to verify that the bullet has left the barrel. Firing the second cartridge before the bullet leaves the barrel may disable your barrel and weapon, and may also harm the shooter during the shot. Perform this check following the safety rules for discharging the gun.
* If ammunition is not ejected or cannot be removed, lock the slide in the retracted position.
* Inspect the cartridge and carefully attempt manual extraction/ejection. If the cartridge cannot be extracted/ejected, seek the assistance of a qualified armorer or gunsmith.

⚠ IMPORTANT

If there is an obstruction in the barrel chamber and/or barrel and you continue shooting, this may result in damage to your firearm, physical injuries, and even death to the user and/or third parties. TISAS is absolutely not responsible for any direct and/or indirect damages that may occur due to this and similar wrong and erroneous practices of the users. Additionally, this voids the warranty given to the product.

Troubleshooting other malfunctions:

* Replace any damaged magazines or ammunition cartridges.
* Inspect and clean the chamber. Clean the magazine.
* Clean the thumb safety selector and the cartridge ramp.
* If after taking these steps your pistol continues to malfunction, obtain assistance from a qualified armorer or gunsmith.

⚠ ATTENTION

Carry out all troubleshooting operations in a safe location with the firearm pointed in a safe direction.

DISASSEMBLY AND ASSEMBLY

DISASSEMBLY

* Point the barrel in a safe direction and remove the magazine.
* Pull the slide to the rear and visually inspect the chamber to confirm that it is empty.
* Slightly push the slide backwards and rotate the slide stop up.
* Rotate the disassembly lever clockwise.
* Firmly grip the slide, pull it slightly to the rear and allow it to slowly move forward.

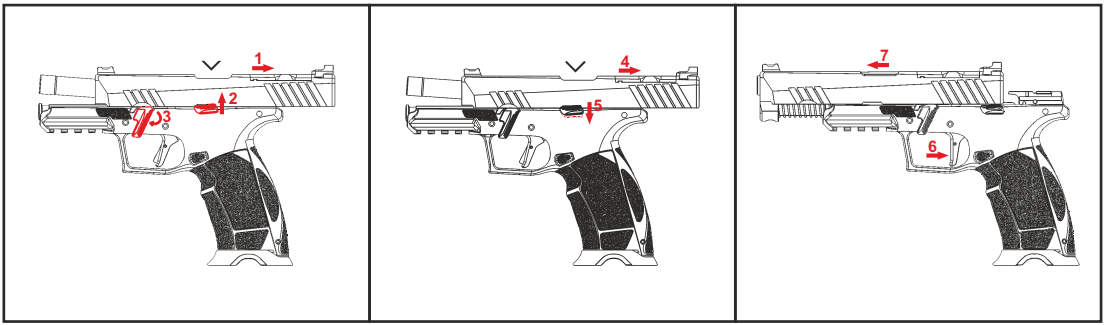

*Pull and release the trigger.
*Move the slide forward and remove it.

NOTE

Keep your hand on recoil spring as it is under pressure. If you lose your grip, the spring may eject and could lead to injury.

ASSEMBLY

*Follow the steps for disassembly in reverse order.
*Remember to secure your firearm.

⚠ WARNING

Use appropriate personal protective equipment during assembly-disassembly.

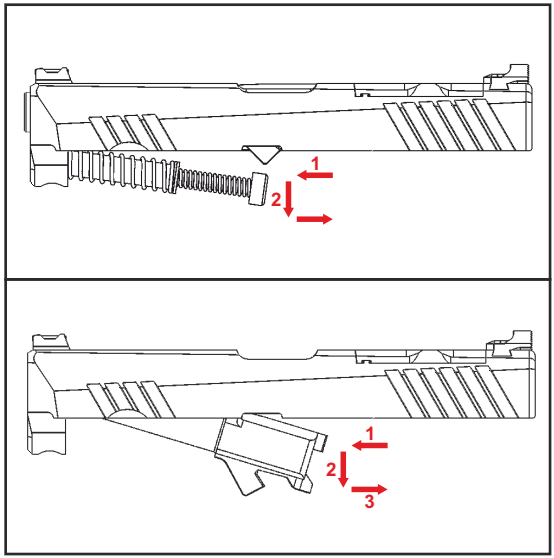

Installation of the back Backstrap and Grip Panels

1. Using a Ø2.4mm pin punch, remove the pin (disassembly punch) holding the backstrap in position. Choose the combination of backstrap and grip panels that provide the panels the most comfortable fit for the operator.

2. Install the two grooves on the inside of each grip panel onto the corresponding tongues located on the outside of the frame and push the panels forward until they seat flush into the frame.

3.Seat the backstrap on to the back of the frame and push upwards until the mounting surface for the disassembly punch on the backstrap aligns with the mounting surface for the disassembly punch on the frame.

4. Drift the disassembly punch into position and capture the backstrap to the frame using the pin punch. Follow the steps for disassembly in reverse order.

Assembly

Follow the steps for dissassembly in reverse order.

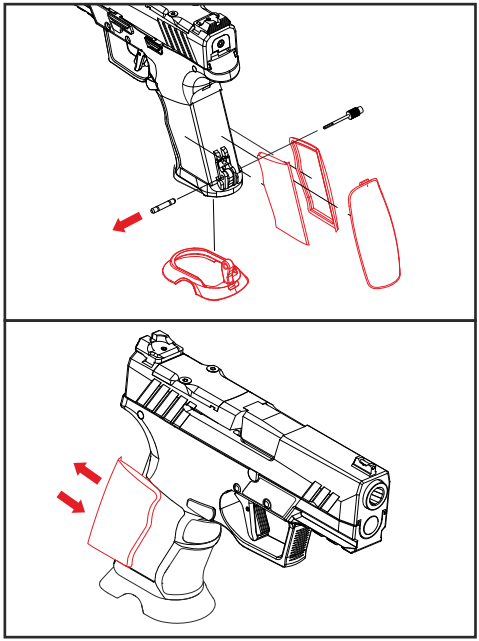

Assemble The Red Dot Sight

Required auxiliary materials:Torque wrench 2 - 10 Nm or screw bit 2 mm.

1. Adjust torque wrench.

2. Loosen screws and remove.

3. Remove slide plate.

4. Insert reddot in slide.

5. Insert screws in the red dotsight.

6. Tighten screws until the torque is reached.

Assembly

Follow the steps for disassembly in reverse order.

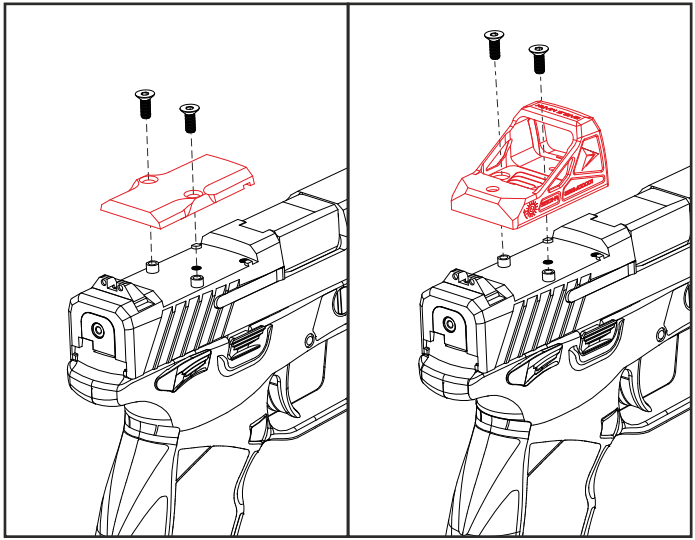

CLEANING AND MAINTENANCE

To ensure that your gun is always ready to fire and has a long life, follow the rules below and maintain it after each shot, whenever you feel it is affected by external factors such as moisture or dust, or once a month.

Materials required for cleaning:

* Cleaning cloth
* Gun oil
* Brush
* Ramrod

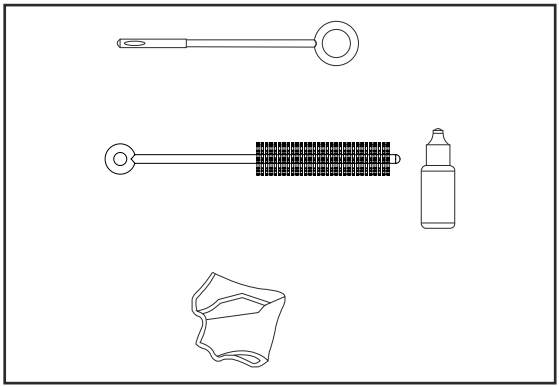

⚠ WARNING

Use appropriate personal protective equipment when cleaning and never use solvents.

* Remove the magazine.
* Point the barrel in a safe direction and make sure your gun is unloaded.
* Disassemble the gun.
* Wipe dirty surfaces, parts, slide channels and the inside of the barrel with cleaning oil using a brush.
* Do not use a brush from both ends of the barrel, clean only from the end of the chamber.
* Do not rotate the brush left and right in the barrel, use it linearly.
* Lightly lubricate all external and internal parts with gun oil.
* Dry the inside of the barrel with a clean cloth.
* Dry the outer surfaces of the gun with a clean cloth.
* Remove excess oil from the internal working parts of the gun.
* Reassemble the gun.

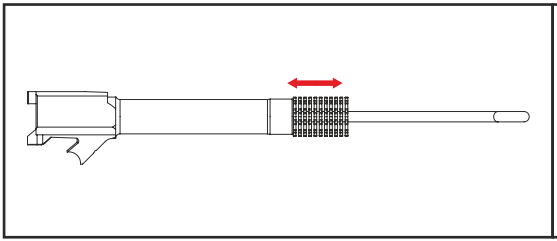

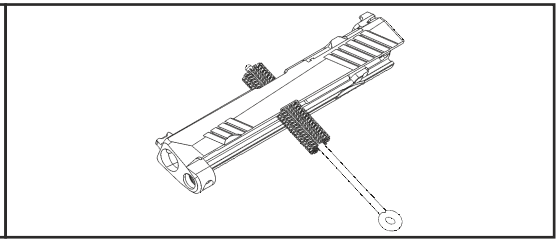

TECHNICAL SPECIFICATIONS

CALIBER	9x19 mm
MAGAZINE CAPACITY	18 or 20 rounds
BARREL LENGTH	DUTY=104.6 mm, DUTY TH= 119.1 mm, TACTICAL TH= 129.7 mm
LENGTH	DUTY=188.9 mm, DUTY TH= 202.1 mm, TACTICAL TH= 212.7 mm
HEIGHT	147.5 mm
WEIGHT	DUTY=793.7 g, DUTY TH=810 g, TACTICAL TH=850 g
WIDTH	34 mm
ACTION TYPE	SA
FIRING SYSTEM	Semi - Auto Striker
SAFETY SYSTEMS	Firing Pin Block, Ambidextrous Thumb Safety
FEATURES	Reversesible Magazine Catch, Accessory Rail, Three changeable backstraps and six side panels (ACCOMMODATING ALL HAND SIZES
OPTIONAL ITEM	IWB Holster, Magazine Loader

PX-9 GEN3 PART LIST

NO.	CODE	PART DESCRIPTION
1	PX9-1	MAGAZINE CATCH
2	PX9-1.01	MAGAZINE CATCH SPRING
3	PX9-3	FRONT SIGHT (FIBER OPTIC)
4	PX9-3.01	FRONT SIGHT SCREW
5	PX9-11	STRIKER
6	P9L-11.01	STRIKER SPRING
7	PX9-11.02	STRIKER DAMPENING SPRING
8	PX9-47.03	STRIKER RETAINER PIN
9	PX7-13	STRIKER LOCKING PLATE
10	PX9-15	STRIKER STATUS INDICATOR
11	PX9-15.01	STRIKER SPRING GUIDE
12	PX9-16	DRIFT ADJUSTABLE REAR SIGHT
13	BRV-16a	REAR SIGHT SCREW
14	PX9-17	THUMB SAFETY RELEASE PIN
15	PX9-18a.02	SAFETY LOCK PLUNGER, LEFT
16	TK1-18.01	SAFETY LOCK PLUNGER SPRING LEFT
17	PX9-24	EJECTOR
18	PX9-24.01	EJECTOR PIN
19	PX9C-28	TAKE-DOWN LEVER
20	PX9C-31	BARREL
21	PX9C-32	SLIDE
22	PX9-33	TRIGGER BAR
23	PX9-33.01	TRIGGER BAR PIN
24	PX9C-40	FRAME
25	PX9C-40.01	LOCKING BLOCK
26	PX9C-40.02	LOCKING B. PIN AND TRIGGER PIN
27	PX9C-40.03	LOCKING BLOCK PIN SPRING
28	PX9-42	TACTICAL TRIGGER
29	PX9-42.01	TRIGGER SPRING
30	PX9-42.a	TRIGGER SAFETY
31	PX9-42a.01	TRIGGER SAFETY PIN
32	PX9-42a.02	TRIGGER SAFETY SPRING
33	PX9-47	EXTRACTOR
34	TK-47.01	EXTRACTOR SPRING

NO.	CODE	PART DESCRIPTION
35	PX9-47.03	EXTRACTOR PIN
36	PX9C-54	RECOIL SPRING GUIDE CONNECTOR
37	PX9C-54.01	RECOIL SPRING GUIDE CONNECTOR SPRING
38	PX9C-55	RECOIL SPRING GUIDE
39	PX9C-55.01	RECOIL SPRING
40	PX9C-55.02	RECOIL SPRING GUIDE BUSHING
41	PX9C-55.03	RECOIL SPRING BUSHING
42	PX9C-56	SLIDE STOP
43	PX9C-56.01	SLIDE STOP SPRING
44	PX9-67	STRIKER SAFETY BLOCK
45	PX9-67.01	STRIKER SAFETY BLOCK SPRING
46	PX9-67.02	STRIKER SAFETY BLOCK PIN
47	PX9-70	STRIKER SAFETY LEVER
48	PX9-71	SEAR
49	PX9-71.01	SEAR SPRING
50	PX9-71.02	SEAR PIN
51	PX9-72	BACKSTRAPS (S)
52	PX9-72.02	BACKSTRAPS PIN SPRING
53	PX9C-72.03	BACKSTRAPS PIN
54	PX9C-73	BACKSTRAPS (M)
55	PX9C-74	BACKSTRAPS (L)
56	PX9C-72.01	GRIP PANEL, LEFT AND RIGHT (S)
57	PX9-73.01	GRIP PANEL, LEFT AND RIGHT (M)
58	PX9C-74.01	GRIP PANEL, LEFT AND RIGHT (L)
59	PX9-800	MAGAZINE ASSEMBLY
60	PX9-75	MAGWELL
61	PX9-18.01	MAGWELL SCREW
62	PX9-76	RMR COVER PLATE
63	PX9-76.01	RMR COVER PLATE SCREW (X2)
	PX9-18	SAFETY LOCKRIGHT (OPTIONAL)
	PX9-18.02	SAFETY LOCK PLUNGER, LEFT AND RIGHT(OP.)
	PX9-18a	SAFETY LOCK PLATE, LEFT (OPTIONAL)
	PX9-18a.03	SAFETY LOCK PLATE, LEFT (OPTIONAL)

EXPLODED DIAGRAM PX-9 GEN3

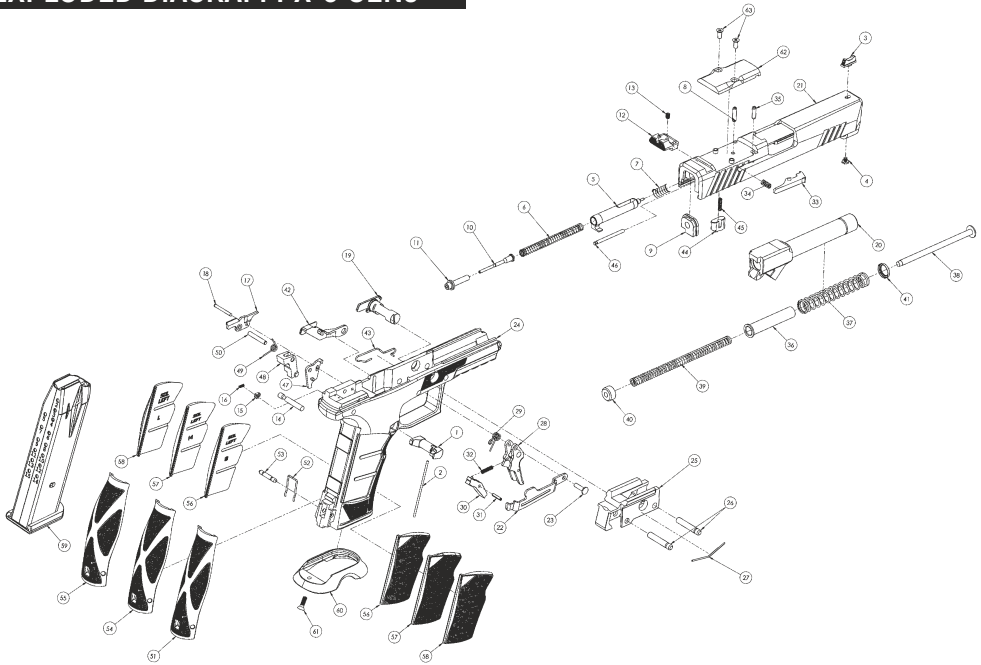

PX-9 GEN3 TH PART LIST

NO.	PART DESCRIPTION	CODE
1	MAGAZINE CATCH	PX9-1
2	MAGAZINE CATCH SPRING	PX9-1.01
3	FRONT SIGHT (FIBER OPTIC)	PX9-3
4	FRONT SIGHT SCREW	PX9-3.01
5	STRIKER	PX9-11
6	STRIKER SPRING	P9L-11.01
7	STRIKER DAMPENING SPRING	PX9-11.02
8	STRIKER RETAINER PIN	PX9-47.03
9	STRIKER LOCKING PLATE	PX7-13
10	STRIKER STATUS INDICATOR	PX9-15
11	STRIKER SPRING GUIDE	PX9-15.01
12	DRIFT ADJUSTABLE REAR SIGHT	PX9-16
13	REAR SIGHT SCREW	BRV-16a
14	THUMB SAFETY RELEASE PIN	PX9-17
15	SAFETY LOCK PLUNGER, LEFT	PX9-18a.02
16	SAFETY LOCK P. SPRING LEFT	TK1-18.01
17	EJECTOR	PX9-24
18	EJECTOR PIN	PX9-24.01
19	TAKE-DOWN LEVER	PX9C-28
20	BARREL	P9L-31
21	THREADED BARREL CAP	PX9-31.01
22	SLIDE	P9L-32
23	TRIGGER BAR	PX9-33
24	TRIGGER BAR PIN	PX9-33.01
25	FRAME	PX9-40
26	LOCKING BLOCK	PX9-40.01
27	LOCKING B. PIN AND TRIGGER PIN	PX9-40.02
28	LOCKING BLOCK PIN SPRING	PX9-40.03
29	TACTICAL TRIGGER	PX9-42
30	TRIGGER SPRING	PX9-42.01
31	TRIGGER SAFETY	PX9-42.a
32	TRIGGER SAFETY PIN	PX9-42a.01
33	TRIGGER SAFETY SPRING	PX9-42a.02
34	EXTRACTOR	PX9-47
35	EXTRACTOR SPRING	TK-47.01

NO.	PART DESCRIPTION	CODE
36	EXTRACTOR PIN	PX9-47.03
37	RECOIL SPRING GUIDE	P9L-55
38	RECOIL SPRING	ZA-55.01
39	SLIDE STOP	PX9-56
40	SLIDE STOP SPRING	PX9-56.01
41	STRIKER SAFETY BLOCK	PX9-67
42	STRIKER SAFETY BLOCK SPRING	PX9-67.01
43	STRIKER SAFETY BLOCK PIN	PX9-67.02
44	STRIKER SAFETY LEVER	PX9-70
45	SEAR	PX9-71
46	SEAR SPRING	PX9-71.01
47	SEAR PIN	PX9-71.02
48	BACKSTRAPS (S)	PX9-72
49	BACKSTRAPS PIN SPRING	PX9-72.02
50	BACKSTRAPS PIN	PX9-72.03
51	BACKSTRAPS (M)	PX9-73
52	BACKSTRAPS (L)	PX9-74
53	GRIP PANEL, LEFT AND RIGHT (S)	PX9-72.01
54	GRIP PANEL, LEFT AND RIGHT (M)	PX9-73.01
55	GRIP PANEL, LEFT AND RIGHT (L)	PX9-74.01
56	MAGAZINE ASSEMBLY	PX9-800
57	MAGWELL	PX9-75
58	MAGWELL SCREW	PX9-18.01
59	RMR COVER PLATE	PX9-76
60	RMR COVER PLATE SCREW (X2)	PX9-76.01
	SAFETY LOCKRIGHT (OPTIONAL)	PX9-18
	SAFETY LOCK PLUNGER, LEFT AND RIGHT(OP.)	PX9-18.02
	SAFETY LOCK PLATE, LEFT (OPTIONAL)	PX9-18a
	SAFETY LOCK PLATE, LEFT (OPTIONAL)	PX9-18.03

EXPLODED DIAGRAM PX-9 GEN3 TH

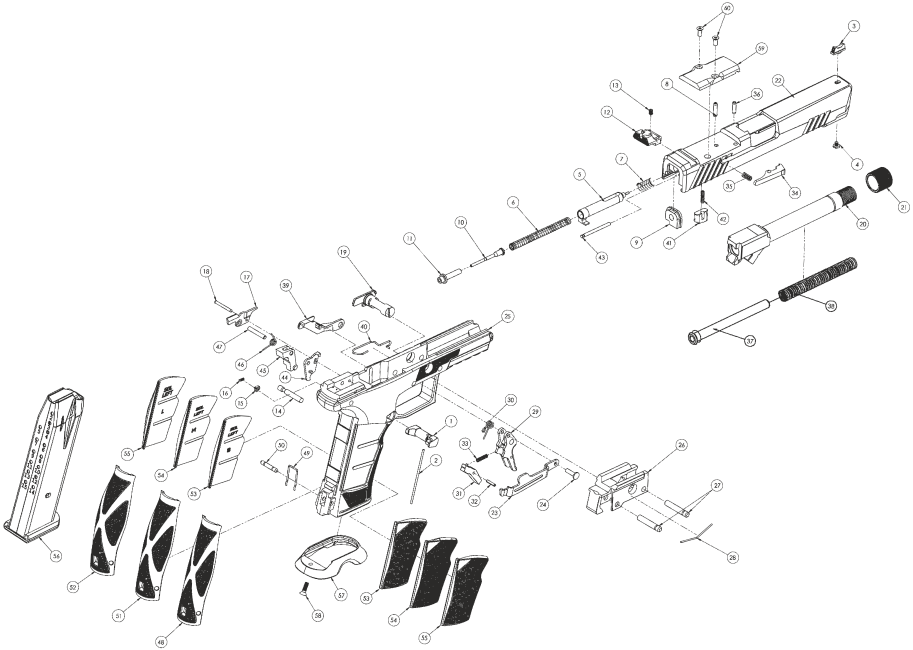

IMPORTER INFORMATION

NOTES


Tisas®
1993

© ALL RIGHTS RESERVED ● UPDATED - 2025/06

/tisasarms

TİSAŞ®

1993

FACTORY
Organize Sanayi Bölgesi 61900 Arsin/TRABZON Tel: 0 462 711 10 80 Fax: 0 462 711 17 87

FOREIGN TRADE DEPARTMENT
Mebuslarevi Mah. Dögol Cad. No: 13/1 Çankaya/ANKARA Tel: 0 312 213 75 09 Fax: 0 312 213 78 06

FOREIGN TRADE DEPARTMENT
Gümüşsuyu Mah. İnönü Cad. Marmara Apt. Blok No: 45/a Beyoğlu/İSTANBUL Tel: 0 212 243 42 05 Fax: 0 212 251 59 32