Tisas®

www.tisasarms.com

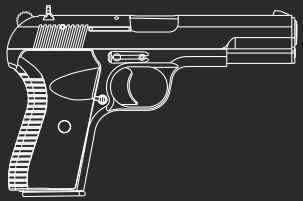

USER MANUAL HANDLING & SAFETY INSTRUCTIONS

EN

ZP9

READ THE INSTRUCTIONS AND WARNINGS IN THIS MANUAL CAREFULLY BEFORE USING THIS FIREARM; DO NOT DISCARD THIS MANUAL.


Tisas®
1993

INTRODUCTION

TISAS Silah Sanayi A.Ş. one of the leading pistol manufacturers. Our company manufactures pistol conforming to the ISO EN 9001-2015 regulations.
This manual will guide you in using safety, assembling/disassembling and maintaining the ZP9 models pistols.
Please get in touch with TISAS for any further questions.

Do not use this firearm until you fully understand all of the safety instructions and handling procedures.

⚠ WARNING

TISAS Silah Sanayi A.Ş. is not responsible for the violations of usage regulations, the careless usage, the modification of the parts and/or internal safeties without permission, causing a damage because of - non - standart, deective inappropriate ammunition, the physical deformation caused by wrong usage and maintenance of the owner. TISAS is also not responsible for the acts of its owner like physical injury, damaging personel and propoerty rights and similar situations that are not related directly to TISAS, like physical injury damaging personel and property right and the similar situations.

SAFETY RULES

* Weapon is not dangerous. The cause of the danger is ignorance and carelesssness.
* For protection against the accidents, please obey the rules below.
* Accidents are always the result of not obeying the main safety rules.
* Those who use the gun are responsible with avoiding any accident that may occur.
* Always treat firearm as if it was loaded. For the safety of gun, the safety pin must be on the position" Safety".
* Release the magazine and take out the cartridge in the barrel as pulling the see destroyed.
* Learn the safety mechanisms and unloading it.
* Always keep your finger off the trigger until ready to shoot.
* Aim the gun to a safe direction when reloading and unloading it.
* Always keep the gun unloaded until ready to use.
* Use only the proper ammunition.
* Do not shoot at hard surfaces and water.
* Never use alcohol or over-the-counter, prescription or other dugs before or while shooting.
* Wear eye and ear protection as appropriate.
* Be sure taht you are using a clean gun, regularly upkeep your gun.
* Always secure your firearms so that they are not accessible to children, other unauthorized and untrained persons.
* Although you are sure that your gun is empty, point the muzzle away from alive objects and non-targets.

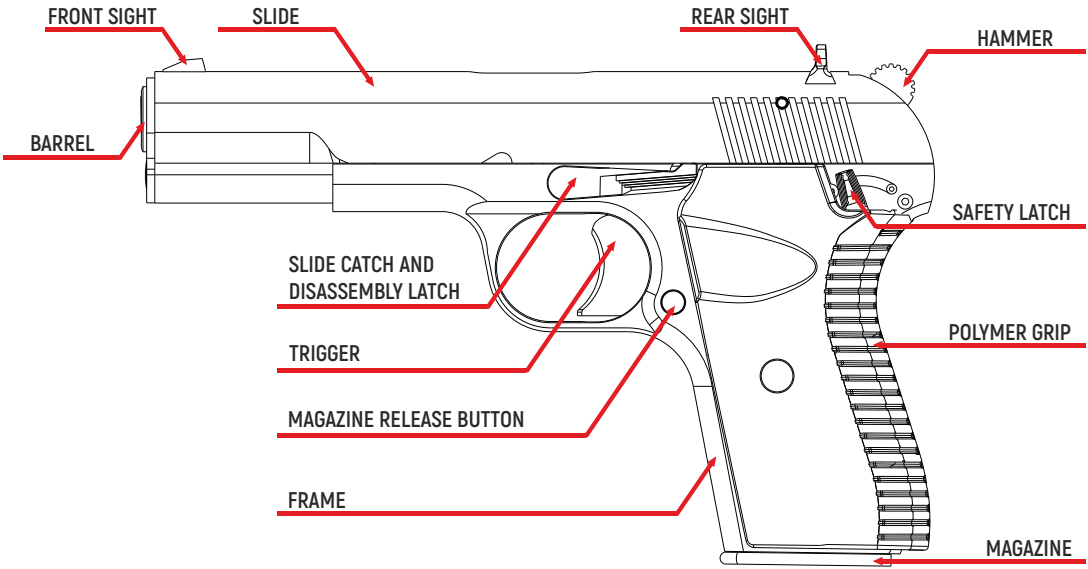
FRONT SIGHT
SLIDE
REAR SIGHT
HAMMER
BARREL
SAFETY LATCH
SLIDE CATCH AND
DISASSEMBLY LATCH
POLYMER GRIP
TRIGGER
MAGAZINE RELEASE BUTTON
FRAME
MAGAZINE

SECTION 1 LOADING THE PISTOL

RELEASING MAGAZINE

To remove the magazine, hold the pistol with your right hand, press the magazine release buton with your thumb. (Pic.1)

LOADING THE MAGAZINE

Hold the magazine with your left hand and insert the cartridges one by one with your right hand, pressing them down to rear, continue inserting the cartridges. Insert the magazine into the pistol until its held by the magazine catch.(Pic.2)

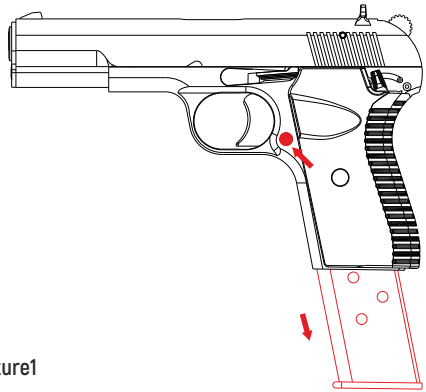

Picture1

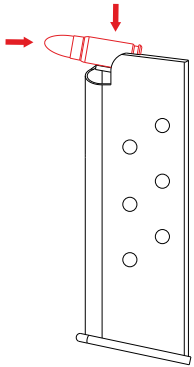

Picture2

⚠ ATTENTION

Always make sure that the muzzle is aimed at a safe direction while loading and unloading.

SETTING THE MAGAZINE

Hold the pistol with your hand, keeping away your hand, keeping away your finger from the trigger. Insert the magazine into the pistol until its held by the magazine catch and it clicks. (Pic.3)

COCKING THE PISTOL

Hold the pistol with your right hand and keeping your finger away from the trigger, pull back the slide to the end point with your left hand and release it. When the slide takes the first position with the help of the recoil spring. The slide will take a cartridge from the magazine. The pistol is cocked and ready to fire. (Pic.4)

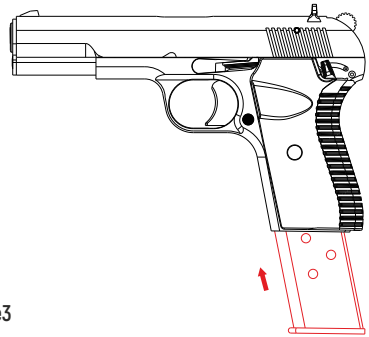

Picture3

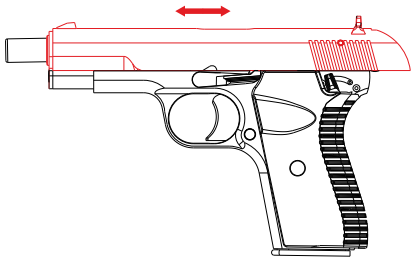

Picture4

SECTION 2 SHOOTING

⚠ ATTENTION

You are carrying a pistol loaded and ready to fire. Keep your finger off the trigger until you are actually aiming at the target ready to shoot.

If you're new in using a firearm, you shuld seek a supervised instruction by an instructor in a shooting range.

1. After wearing eye and ear protection, turn to the target with your loaded pistol.
2. Keep your feet 30-45 cm apart to take correct stance.
3. Raise your arm (see Pic.5) and line up with the target. Aim the gun and pull the trigger.
4. With each pull of trigger, one shot will occur.
5. If you want stop shooting, decock and unload your pistol conforming the general rules.

⚠ ATTENTION

If you are shooting in the open area away from residential places see your shot is safe direction.
The efective range is related with line of sight. When the bullet leaves from the barrel, it is 370 meter away at first second.
Do not shoot in the direction where a living thing can be seen or in the bush which you can't see through. The fall distance of the bullet is between 800-1000 meter.

⚠ ATTENTION

Pull the trigger only for firing otherwise keep away your finger from the trigger.

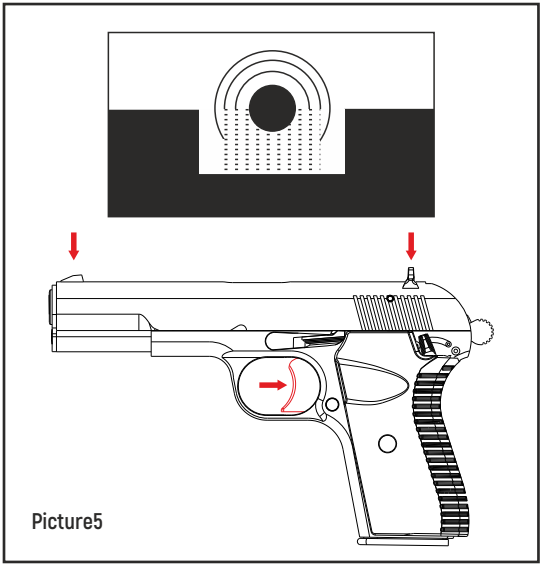

Picture5

SECURE YOUR PISTOL

Turn the safety latch towards red dot on the pistol frame in order to secure your pistol. This disconnects the hammer and firing pin catch. (Pic.5)

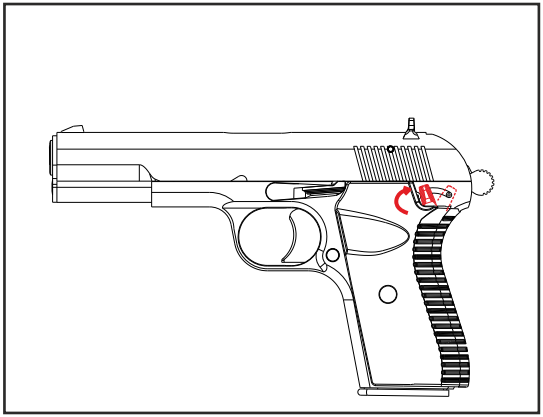

⚠ ATTENTION

Direct you gun to the safe direction, keep away your finger from trigger.

UNLOADING THE PISTOL

1. Hold the pistol with your right hand and press the magazine release button with your thumb. Release the magazine with the other hand. (Pic.7)

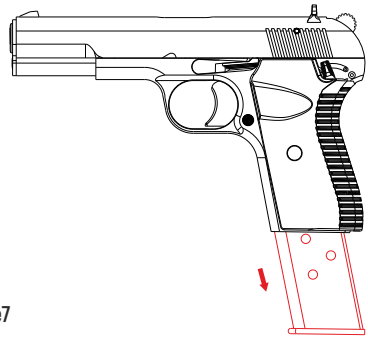

Picture7

UNLOADING THE PISTOL

2. After releasing the magazine you should control the chamber. If the cartridge is still in the chamber, clear it. Clear the chamber if still remains cartridge. Always check the chamber and the interior area of the receiver and the magazine-well to be certain there are no cartridges present. (Pic.8)

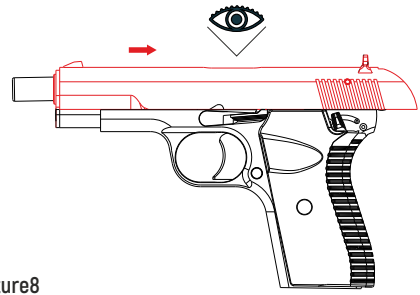

Picture8

SECTION 3 DISASSEMBLING THE PISTOL

RELEASING MAGAZINE

1. Hold the pistol with your right hand, to remove the magazine release button with your thumb. Release the magazine. (Pic.9)

2. After removing the magazine, visually check whether a cartridge is in the chamber or not. Make sure the gun is pointed in a safe direction. (Pic.10)

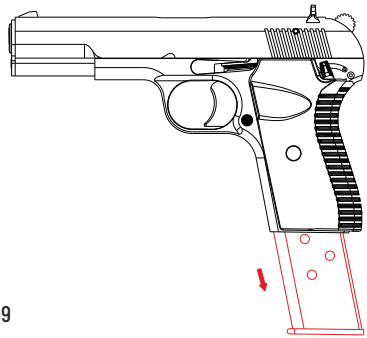

Picture9

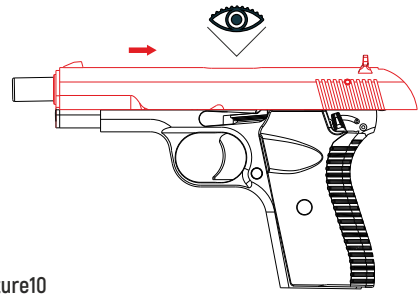

Picture10

⚠ ATTENTION

Always keep your finger off the trigger until ready to shoot.

DISASSEMBLING THE SLIDE

3. Grip the pistol with your left hand. Pull reward the Spring of slide catch at the right side of the pistol to release it from it's pin (Pic.11)
4. Remove the slide catch from the left part of the frame. (Pic-10)
5. Remove the slide component. (Pic-13)

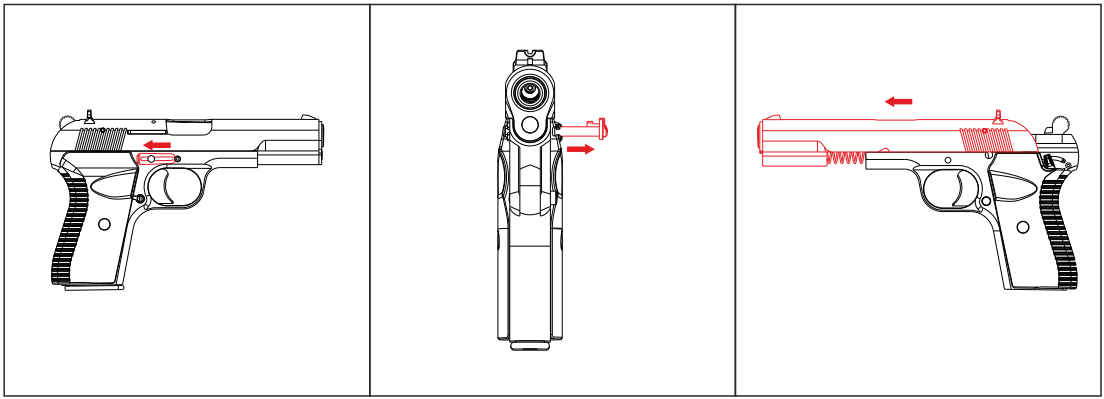

RELEASING THE BARREL

6. Grip the slide from its left top. Push recoil Spring slightly with your right thumb and take the coil and it's Spring.(Pic.14)
7. Remove the barrel bushing to anti-clockwise and pull it up.(Pic.15)
8. Take the barrel link to horizontal position.(Pic.16)

⚠ ATTENTION

Uncontrolled action would throw away the recoil by the force of the Spring and may cause possible incidents

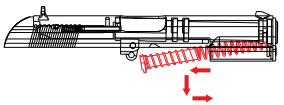

Picture14

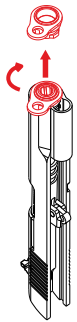

Picture15

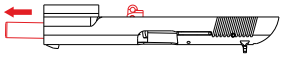

Picture16

THE PARTS THAT CAN BE REMOVED BY THE USER FOR CLEANING AND CARE

⚠ ATTENTION

Please contact to the gunsmith for disassemling the other parts of the gun

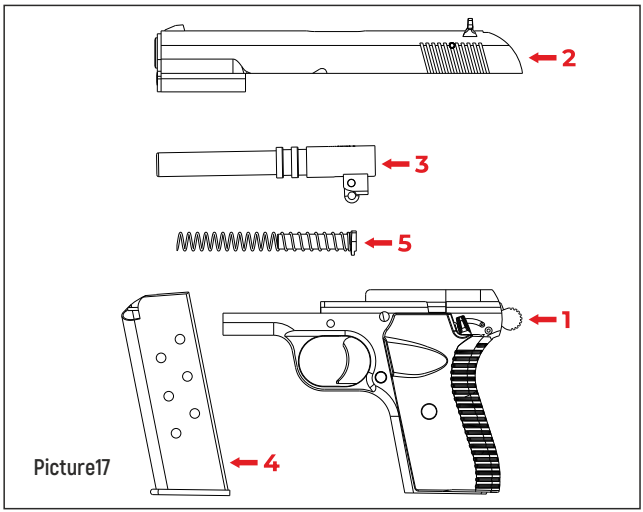

Picture17

1. Frame Group
2. Slide Group
3. Barrel
4. Magazine
5. Recoil Spring and Mile

SECTION 4 CARE

CLEANING PISTOL

For the reliable functioning and durability of the pistol, after each Shooting or whenever the pistol has been exposed to humidity, dust or other adverse conditions, make its upkeeping once a month following the proceedings below. Requirements for upkeeping: Brus, oil, cleaning rod, cloth.(Pic.18)

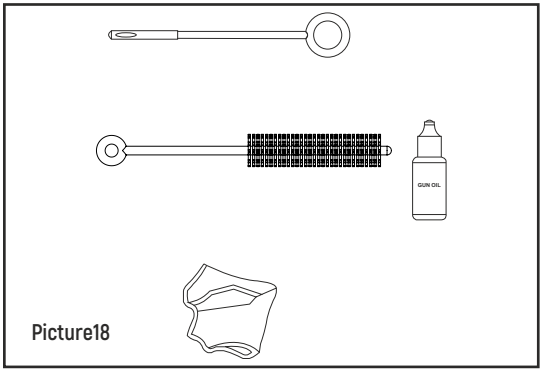

Picture18

CARE

1. Disassemble the pistol.(Pic.3)
2. Using an oiled, scrub inside of the slide and chambers.(Pic.19)

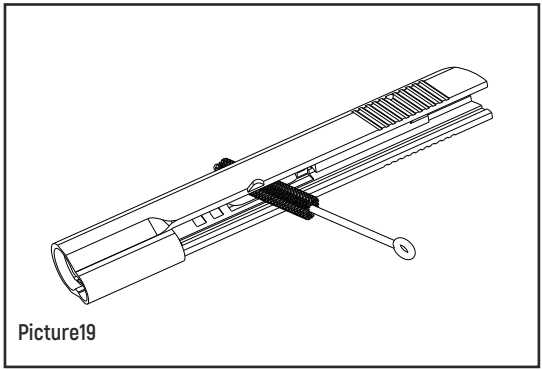

Picture19

⚠ ATTENTION

Tough and dusty materials that can damage the metal surfaces would not be used by the purpose of cleaning.

3. Swab the interior of the slide with the cloth to remove the excess accumulations of oil.
4. With the oiled brush, run throuhg the barrel several times.(Pic.20)
5. Wipe dry inside the barrel with the cleaning rod and cloth.(Pic.21)
6. Check all the parts cleaned or not, if stil remains dirt, repeat the steps.
7. Wipe all parts and surfaces with a cloth that is lightly oiled.
8. Before firing remove all oil from the barrel with cleaning rod and cloth.



Picture20



Picture21

REASSEMBLING PISTOL

Please re-install the gun action to reverse disassembly process. Please note following issues during the process

1. Position the barrel into the slide and take the barrel link to vertical position.(Pic.22)
2. Position the barrel bushing and turn to clockwise and place it in its own place.(Pic.23)
3. Position the recoil and spring inside the slide in correct manner.(Pic.24)

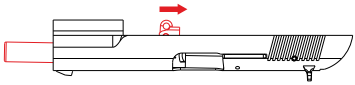

Picture22

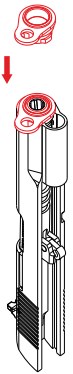

Picture23

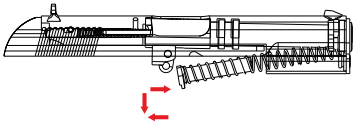

Picture24

⚠ ATTENTION

Never use drug and alcohol when you carry a gun

4. Position the slide on the frame. Insert the slide catch into it's own space on the left side of the frame. (Pic.25)
5. Push the slide catch spring on the right side of the frame to immobilise the slide catch. (Pic.26)
6. Insert the magazine.
7. Secure your gun. (Pic.6)

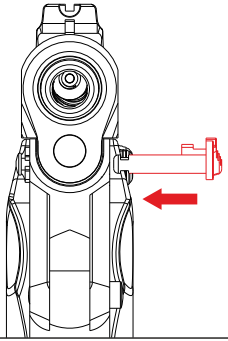

Picture25

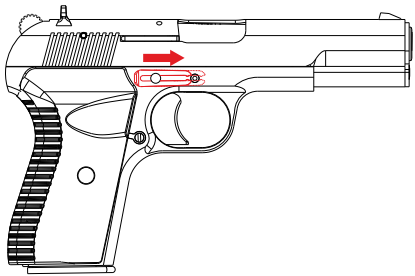

Picture26

SECTION 5 TECHNICAL SPECIFICATIONS

CALIBER	7,65X25mm.	9X19mm.
MAGAZINE CAPACITY	8 Round	8 Round
SAFETY SYSTEM	Thumb Safety, Hammer Safety	Thumb Safety, Hammer Safety
WEIGHT (WITHOUT MAGAZINE)	765 gr.±	756 gr.±
LENGTH	194 mm.	194 mm.
HEIGHT	134 mm.	134 mm.
WIDTH	30 mm.	30 mm.
BARREL LENGTH	116 mm.	116 mm.
TRIGGER	Single Action	Single Action

PART LIST

NO.	CODE	PART NAME
1	ZİG P9-1	MAGAZINE LOCK
2	ZİG P9-1.01	MAGAZINE LOCK SPRING
3	ZİG P9-1.02	MAGAZINE LOCK SPRING SUPPORT
4	ZİG P9-1.03	MAGAZINE LOCK SPRING SCREW
5	ZİG P9-10	SEAR
6	ZİG P9-10.01	SEAR SPRING
7	ZİG P9-10.02	SEAR PIN
8	ZİG P9-11	HAMMER
9	ZİG P9-11.01	HAMMER PIN
10	ZİG P9-11.02	HAMMER SPRING
11	ZİG P9-11.03	HAMMER SPRING PIN
12	ZİG P9-12	HAMMER SPACE
13	ZİG P9-13	BARREL LINK
14	ZİG P9-13.01	BARREL LINK PIN
15	ZİG P9-15	BARREL BUSHING
16	ZİG P9-16	REAR SIGHT
17	ZİG P9-18	SAFETY LATCH
18	ZİG P9-18.01	SAFETY LATCH SPRING
19	ZİG P9-18.02	SAFETY LATCH PIN
20	ZİG P9-21	PIN
21	ZİG P9-21.01	PIN SPRING
22	ZİG P9-21.02	PIN SUPPORT
23	ZİG P9-26	DISCONNECTOR
24	ZİG P9-28	BARREL LOCK AND SLIDE CATCH
25	ZİG P9-28.01	SLIDE CATCH SPRING
26	ZİG P9-28.02	SLIDE CATCH SUPPORT SPRING PIN
27	ZİG P9-31	BARREL
28	ZİG P9-32	SLIDE
29	ZİG P9-33	TRIGGER CONNECTION
30	ZİG P9-35	RIGHT GRIP
31	ZİG P9-35a	LEFT GRIP
32	ZİG P9-36	MAGAZINE
33	ZİG P9-40	FRAME
34	ZİG P9-42	TRIGGER
35	ZİG P9-42.01	TRIGGER SPRING
36	ZİG P9-42.02	TRIGGER SPRING PIN
37	ZİG P9-43	RIGHT GRIP LOCKING PLATE
38	ZİG P9-43.01	LEFT GRIP LOCKING PLATE
39	ZİG P9-43.02	RIGHT-LEFT GRIP LOCK RIVET
40	ZİG P9-47	EXTRACTOR
41	ZİG P9-47.01	EXTRACTOR SPRING
42	ZİG P9-47.02	EXTRACTOR PIN
43	ZİG P9-55	RECOIL
44	ZİG P9-55.01	RECOIL SPRING BUTT
45	ZİG P9-55.02	RECOIL SPRING

EXPLODED VIEW

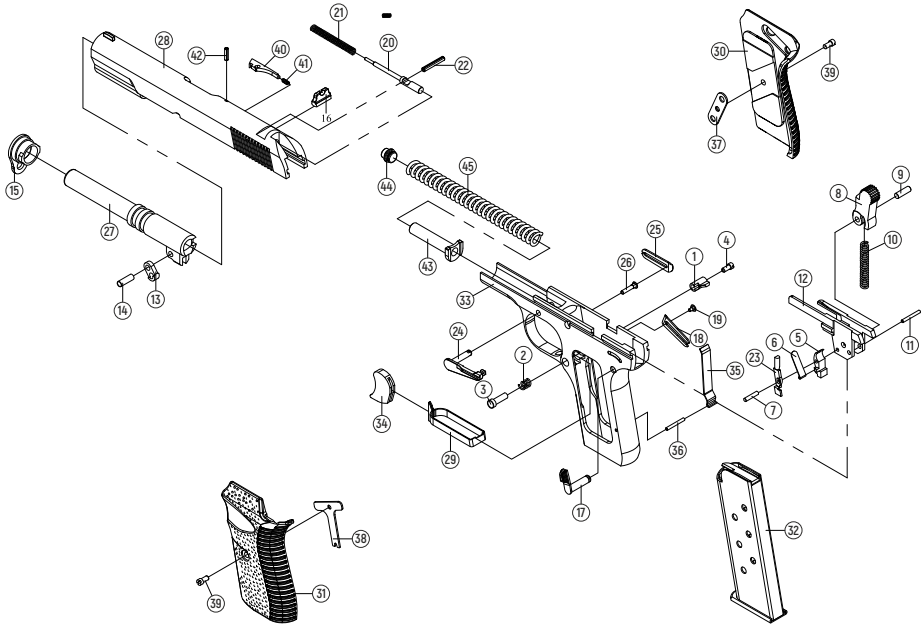

PROBLEMS ON FIRING

Malfunctions or defects at firing of the firearms are caused by wrong maintenance, damaged magazine or wrong type of ammunition.

PROBLEMS	POSSIBLE REASONS	SOLUTION SUGGESTION
Firearm is no firing	Hammer does not work Hammer works but not fire, broken firing pin Dirty sledge surface Wrong type of cartridge	Be sure that the safety latch is on. Take the firearm to a gunsmith. Unload the firearm and clean it. After unloading the pistol, eject the cartridge by pulling back the slide.
Feeding problem	Insufficient cocking Magazine is not positioned well Deformed magazine lip Deformed magazine spring Deformed carrier spring	Repeat the operation by pulling the slide back Push the magazine until it's held by he magazine catch or take the firearm to a gunsmith. Change the magazine. Take the gun to a gunsmith
Ejection failures	Failure in extracting jammed at the cover Broken extractor Wrong type of damaged ammunition Deformed or broken extractor spring Deformed or broken ejector	Remove the magazine from the firearm. Pull the slide back, remove the jammed cartridge with a wooden tool and clean the chamber. If the problem repeats again, take the firearm to a gunsmith. Change the ammunition Take the firearm to a gunsmith

IMPORTER INFORMATION

© ALL RIGHTS RESERVED ● UPDATED - 2025/09

/tisasarms

Tisas®

1993

FACTORY
Organize Sanayi Bölgesi 61900 Arsin/TRABZON Tel: 0 462 711 10 80 Fax: 0 462 711 17 87

FOREIGN TRADE DEPARTMENT
Mebuslarevi Mah. Dögol Cad. No: 13/1 Çankaya/ANKARA Tel: 0 312 213 75 09 Fax: 0 312 213 78 06

FOREIGN TRADE DEPARTMENT
Gümüşsuyu Mah. İnönü Cad. Marmara Apt. Blok No: 45/a Beyoğlu/İSTANBUL Tel: 0 212 243 42 05 Fax: 0 212 251 59 32